TAVRIDA ELECTRIC

VCB

Vacuum Circuit Breaker
17.5kV, ...31.5kA, ...2000A
24kV, ...16kA, ...800A

Product Guide

Contents

1. Introduction 4
1.1 Abbreviations 5
1.2 Definitions 6
1.3 Disclaimers 6
1.4 Precautions 6
1.5 Warranty 6
2. Presentation 7
2.1 Product application field 8
2.2 Key benefits 8
2.3 Compliance 8
3. Product coding 9
3.1 Circuit breaker coding 10
3.2 Circuit breaker component coding 12
3.2.1 ISM coding 12
3.2.2 CM coding 14
3.2.3 Circuit breaker kits coding 15
3.2.4 Optional circuit breaker kit coding 19
3.2.5 Optional release cable coding 20
3.2.6 Optional position indicator coding 21
3.2.7 Optional Manual Generator coding 22
4. Technical parameters 23
5. Design and operation 28
5.1 Design 29
5.1.1 Indoor Switching Module 29
5.1.2 Control Module 30
5.1.3 Insulation kits 31
5.1.4 Interlocking kits 33
5.2 Operation 34
5.2.1 Closing 34
5.1.5 Switching module main contacts position indicator 34
5.2.2 Opening 35
5.2.3 Emergency opening 35
6. Functionality 37
6.1 Indication 38
7. Application notes 40
7.1 Configuration options 41
7.2 Primary connections 43
7.2.1 ISM installation 43
7.2.2 Minimum clearances due to electromagnetic influence 44
7.2.3 Minimum clearances due to rated insulation voltage 45
7.3 Secondary equipment 46
7.3.1 Three-phase ISM secondary connections 46
7.3.2 Single-phase ISM secondary connections 47
7.3.3 CM secondary connections 48
7.3.4 CM and ISM secondary connections 49
7.4 Auxiliary supply 50
Appendix 1. Type tests 51
Appendix 2. Product range 56
Appendix 3. Overall drawings 59
Appendix 4. Secondary schemes 73

1. Introduction

This Product Guide describes the Vacuum Circuit Breakers manufactured by Tavrida Electric.

Tavrida Electric circuit breakers are designed for rated voltages up to 24 kV.

Vacuum Circuit Breakers described in the current document can be used in various kinds of switchgear and RMUs and are intended to perform switching operations in network rated and faulty modes.

The breakers are comprised of following main components:

- Indoor Switching Module (ISM) - The air insulated ISM incorporates Tavrida Electric vacuum interrupters with monstable magnetic actuators and solid dielectric insulating materials. No SF-6 or oil insulation is used in the ISM;
- Control Module (CM) - The CM is a microprocessor based controller that provides ISM operation, protection and data logging functions;
- Kits – The kits of components are used to provide circuit breaker application properties.

This guide contains information about the circuit breaker technical parameters, functionality and operating principles. The purpose of the document is to provide necessary product information for application engineers and technical personnel utilizing the equipment.

List of other technical documents covering the product:

Document name	Target audience	Purpose of the document
User guide	Users providing installation, commissioning and utilizing installed equipment	Provide information on switching operations, required check-ups and maintenance, as well as service and disposal procedures
Routine test certificate	Customer procurement service	Provide information on supplied equipment serial numbers

1.1 Abbreviations

AC	Actuator coil
AS	Auxiliary switch
EMC	Electromagnetic capability
CM	Control Module
CO	Close - Open operations cycle
Com	Common point of contact
I/O	Input / Output
ISM	Indoor Switching Module
LED	Light emitting diode
(P)MCB	Protective miniature circuit breaker
PS	Position switch
NA	Not applicable
NC	Normally closed contact
NO	Normally open contact
PCD	Pole center distance
USB	Universal Serial Bus
VCB	Vacuum Circuit Breaker
VI	Vacuum interrupter
HD ISM	Heavy duty ISM
LD ISM	Light duty ISM

1.2 Definitions

Closing time
The closing time is the time period from the moment the close command is applied to the CM to the time when all ISM poles make contact.

Opening time
The opening time is the time period from the moment the trip command is applied to the CM to the time when all ISM poles are separated.

Break time
The break time is the time period from the moment the trip command is applied to the CM to the time when the arcs in all phases are extinguished.

1.3 Disclaimers

Tavrida Electric will not accept any claims for damages caused by improper transport, storage as well as unpacking. Transport damage must be reported in writing to the supplier as soon as it is discovered.

The User Guide contains information necessary for the installation, commissioning and operation. It is absolutely necessary for the proper use of the Vacuum Circuit Breakers to read the User Guide carefully before starting and to adhere to the instructions and the relevant regulations. Tavrida Electric will not accept any claims for damages caused by improper usage of the Vacuum Circuit Breakers. In case of special configurations please contact Tavrida Electric prior of usage of the Vacuum Circuit Breakers.

1.4 Precautions

- Check whether the installation position (distances, spatial separation, and the surroundings) is suitable for the switching devices.
- Installation, operation and maintenance shall only be carried out by trained and experienced personnel who are familiar with the equipment and the electrical safety requirements.
- During installation, commissioning, operation and maintenance of the equipment the relevant legal regulations (such as DIN/VDE/IEC), accident prevention regulations and the connecting conditions of the electric utilities shall be followed.
- Take note that during operation of the Vacuum Circuit Breakers certain parts are subject to dangerous voltage. Mechanical parts, also remote-controlled, can move quickly. Failure to comply may result in death, severe personal injury or damage to equipment.
- Pay attention to the hazard statements located throughout the User Guide.
- The operating conditions of the Vacuum Circuit Breakers shall comply with the technical data specified in the Product Guide.
- Personnel installing, operating and maintaining the equipment shall be familiar with the User Guide and its contents.

1.5 Warranty

Unless otherwise stated in the contract, the warranty period is stated in Standard warranty policy. If agreed to otherwise, the contract conditions apply. No warranty is given in the case of …
a) … the warranty period having run out during the period of storage with the customer;
b) … the operating conditions, ambient conditions, transport and storage conditions have not been adhered to according to the application description or the Installation and Operating Instructions;
c) … an unauthorized manipulation of the device has been carried out, such as opening the housing or damaging the seal;
d) … the device has not been properly installed, such as incorrect connection of supply voltage of auxiliary circuits.

2. Presentation

2.1 Product application field

The circuit breaker is usually installed in radial or loop cable distribution systems. The main applications are:

- Switching different types of load in normal and fault modes;
- Isolating faults in the cable network.

Due to their short closing and opening times (see Table 10), Tavrida Electric circuit breakers can bring significant benefits to the following applications:

- Arc flash protection;
- Automatic backfeed restoration.

2.2 Key benefits

Tavrida Electric circuit breakers provide the following competitive advantages:

- **Environmentally friendly**
  The ISM does not use SF-6 insulation materials.
  The CM and ISM modules are manufactured from environmentally friendly materials.

- **Light weight and compact dimensions**
  Total weight of the ISM and CM does not exceed 65 kg, making it the most light-weight indoor circuit breaker on the market.
  Overall dimensions of the 17.5 kV circuit breaker does not exceed 560x695x254 mm (HxWxD), and the 24 kV circuit breaker does not exceed 506x265x690 mm

- **Highest Reliability**
  50,000 CO operations at rated current and 100 full rated short-circuit operations without any maintenance make it the most reliable circuit breaker on the market.

2.3 Compliance

Tavrida Electric Vacuum Circuit Breakers have been tested by world-renowned testing laboratories.
A list of test reports is presented in Appendix 1.

3. Product coding

3.1 Circuit breaker coding

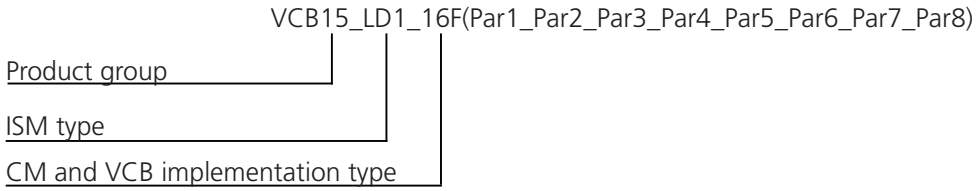

Table 1 - Product group description

Code	Description
VCB15	Vacuum Circuit Breaker with rated voltage up to 17.5 kV
VCB25	Vacuum Circuit Breaker with rated voltage up to 24 kV

Table 2 - ISM type description

Code	Description
LD1	Three-phase Light duty Indoor Switching Module
LD2	Three-phase Light duty Indoor Switching Module for SF6 switchgears
LD3	Single-phase Light duty Indoor Switching Module
LD6	Three-phase Light duty Indoor Switching Module for British retrofit (LMT/AG16 retrofit)
Shell2	Three-phase Heavy duty Indoor Switching Module

Table 3 - CM and VCB implementation type description

Code	Description
16F	The 16th series of Control Module and Fixed type VCB
16RD	The 16th series of Control Module and Retrofit Draw-out type VCB

VCB15_LD1_16F(Par1_Par2_Par3_Par4_Par5_Par6_Par7_Par8)

Product group

ISM type

CM and VCB implementation type

Table 4 - Circuit breaker parameters description

Parameter	Parameter description	Applicable options	Code
Par1	VCB application type	Standard circuit breaker	CB
Par2	Rated voltage	12 kV	12
		17.5 kV	17.5
		24 kV	24
Par3	Rated short cicuit current	12.5 kA	12.5
		16 kA	16
		20 kA	20
		31.5 kA	31.5
Par4	Rated normal current	630 A	630
		800 A	800
		1250 A	1250
		2000 A	2000
Par5	Pole centre distance	Not applicable (for single-phase ISM)	NA
		133 mm	133
		150 mm	150
		180 mm	180
		210 mm	210
		275 mm	275
Par6	Number of lower terminals	One main lower terminal	1
		Two main lower terminals	2
Par7	Rated auxiliary supply voltage	24-60 V DC	60
		110-220 V AC/DC	220
Par8	Customization	Default	No
		Contact your nearest sales representatives to choose the option suitable for you	DY800
			LMT
			AG16

Allowed VCB combinations and their delivery sets are presented in Appendix 2.

3.2 Circuit breaker component coding

3.2.1 ISM coding

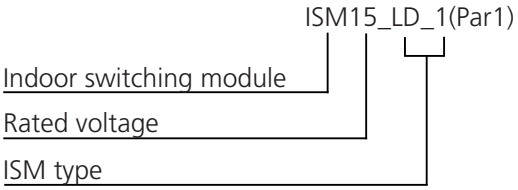

The following ISM types are available:

- ISM15_LD_1(Par1)
- ISM15_LD_3
- ISM15_LD_6
- ISM15_Shell_2(Par1_Par2)
- ISM25_LD_1(Par1_Par2)
- ISM25_LD_2(Par1)
- ISM25_LD_3

ISM15 - Indoor Switching Module with rated voltage up to 17.5 kV
ISM25 - Indoor Switching Module with rated voltage up to 24 kV

See Table 2 for description of ISM types.

Table 5 - Circuit breaker parameters description

Parameter	Applicable ISM	Parameter description	Applicable options	Code
Par1	ISM15_LD_1	Design type (Pole centre distance and main lower terminal design)	Pole centre distance 210 mm, one main lower terminal	55
			Pole centre distance 150 mm, one main lower terminal	67
			Pole centre distance 150 mm , two main lower terminals	80
			Pole centre distance 180 mm, one main lower terminal	90
	ISM15_Shell_2	Pole centre distance	150 mm	150
			210 mm	210
			275 mm	275
	ISM25_LD_1		210 mm	210
			275 mm	275
	ISM25_LD_2	Design type (One or two main lower terminals)	One main lower terminal	1
			Two main lower terminal	2
Par2	ISM15_Shell_2	Upper terminal type (High upper terminal allows for higher normal rated current)	Low upper terminal for rated normal current up to 1250 A	L
			High upper terminal for rated normal current up to 2000 A	H
	ISM25_LD_1	ISM auxiliary contacts type (ISM auxiliary contacts material) [1)]	Silver contacts	S
			Gold plated contacts	G_1

Please specify the rated voltage required with your order.

1) Silver contacts are applicable for usage in conventional low voltage circuits. Gold plated contacts should be used for digital signal circuits with low levels of voltage and current.

Each ISM has the following plate and label:

- Label
- Serial number plate

TAVRIDA ELECTRIC								
Ur	12	kV	Ir	630	A	p	133	mm
Ud	28	kV	Isc	20	kA	W	55	kg
Up	75	kV	tk	4	s	Year	2014	
IEC 62271-1, IEC 62271-100						O - 0.3s - CO - 15s - CO		

Figure 1

ISM label

Figure 2

Serial number plate placement

The serial number plate contains information about ISM type and serial number.
The label contains brief information about ISM technical parameters.

Label and serial number plate arrangement is shown below

a) LD ISM labeling

b) HD ISM labeling

1. Label
2. Serial number plate

Figure 3

Serial number plate and label arrangement

3.2.2 CM coding

CM_16_1(Par1_Par2_Par3)

- Control module
- Control module series
- CM type

Table 6 - CM parameters description

Parameter	Parameter description	Applicable options	Code
Par1	Rated supply voltage	24-60 V DC	60
		110-220 V AC/DC	220
Par2	Application type	Standard circuit breaker	CB
Par3	ISM driver firmware used in CM [1)]	ISM15_LD_1, ISM15_LD_6	1
		ISM15_LD_3	2
		ISM15_Shell_2	3
		ISM25_LD_1, ISM25_LD_2	4
		ISM25_LD_3	5

1) This parameter describes the ISM type(s) that the CM can control. To optimize the operation of each ISM, corresponding settings are used in the CM firmware. Usage of CM with incorrect type of ISM can lead to a mismatch of declared parameters of VCB.

Each CM has the following labels :

- Designation label
- Serial number label

Figure 4
Serial number label

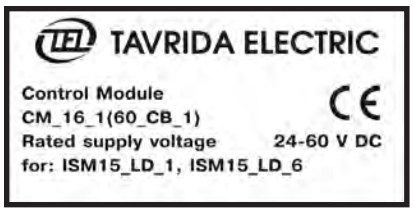

Figure 5
Designation label

1. Serial number label
2. Designation label

Figure 6
Serial number and designation label arrangement

3.2.3 Circuit breaker kits coding

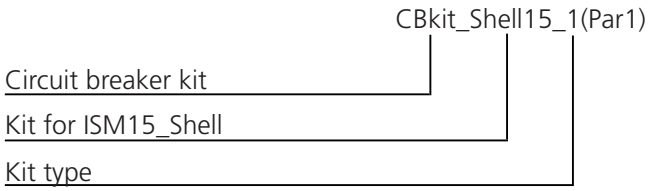

CBkit_Shell15_1 is applicable for the ISM15_Shell_2 only. This kit provides for flat bus bar connection to the ISM while maintaining the declared BIL level.

Table 7 - CBkit parameters description

Parameter	Parameter description	Applicable options	Code
Par1	Terminal distance [1)]	205 mm	205
		310 mm	310

1) Parameter describes the distance between bus bar connection points on the upper and lower terminals of the ISM15_Shell_2 per Figures 7 and 8.

The mounting kit for 205 mm terminal distance is used for the ISM15_Shell_2 with lower upper terminal and normal rated currents up to 1250 A, 310 mm is used for the ISM15_Shell_2 with higher upper terminal and normal rated currents up to 2000 A.

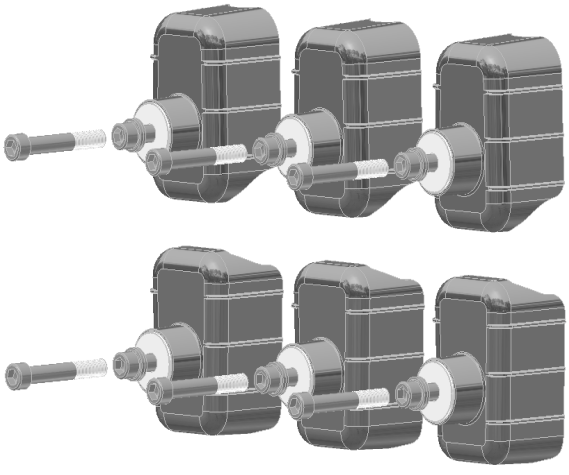

Figure 7
CBkit_Shell15_1(205)

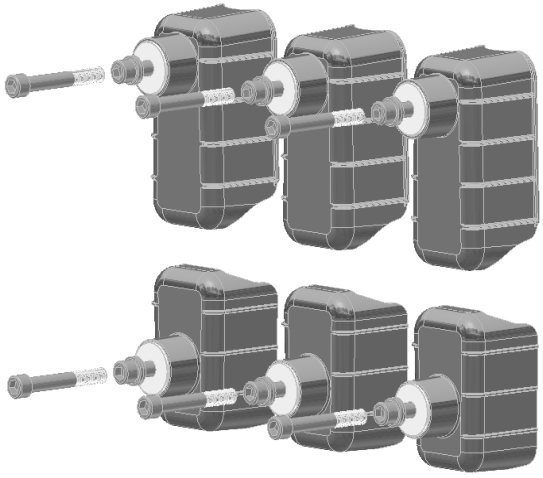

Figure 8
CBkit_Shell15_1(310)

Insulation caps provide ISM terminal insulation. Two sets of bolts are provided for different bus bar configurations (single or double stacked).

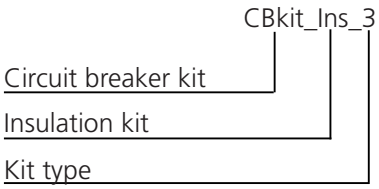

CBkit_Ins_3 is used with the ISM25_LD_1 and ISM25_LD_3 switching modules only and provides compliance with declared BIL level.

Figure 9
CBkit_Ins_3

CBkit_LD15_2

Circuit breaker kit

Kit for ISM15_LD

Kit type

CBkit_LD15_2 is used with the ISM15_LD_6 only. CBkit_LD15_2 is a kit of plastic parts providing insulation of main circuits and indication of main contacts state for LMT Retrofit Draw-out type VCB. Please contact your nearest Tavrida Electric sales representative for more information.

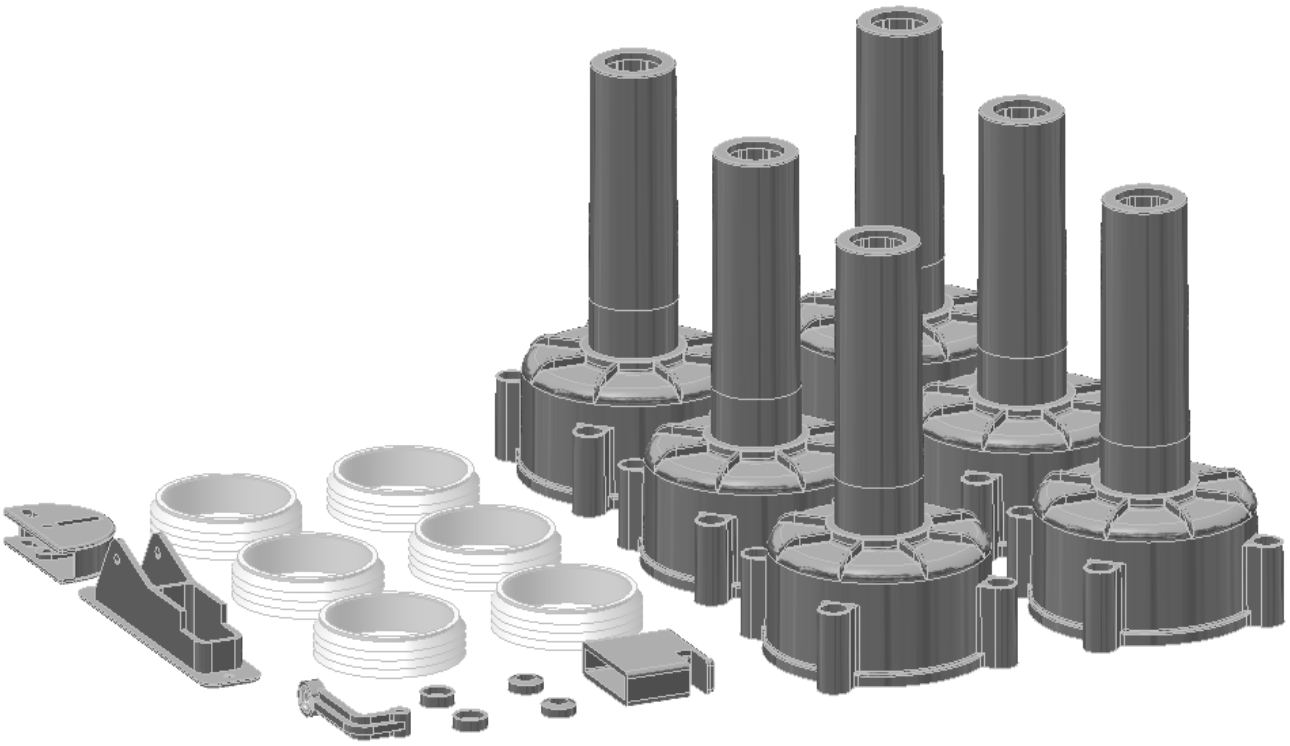

Figure 10

CBkit_LD15_2

CBkit_LD15_3

Circuit breaker kit

Kit for ISM15_LD

Kit type

CBkit_LD15_3 is used with the ISM15_LD_6 only. CBkit_LD15_3 is a kit of plastic parts providing insulation of main circuits and indication of main contacts state for AG16 Retrofit Draw-out type VCB. Please contact your nearest Tavrida Electric sales representative for more information.

Figure 11

CBkit_LD15_3

3.2.4 Optional circuit breaker kit coding

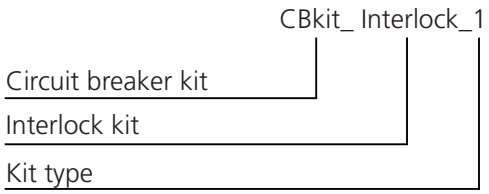

CBkit_Interlock_1 is used with the ISM15_LD_1, ISM25_LD_1 and ISM25_LD_2 only. The kit attaches to the ISM synchronizing shaft and serves as an interface for various manual trip / indication / lockout accessories.

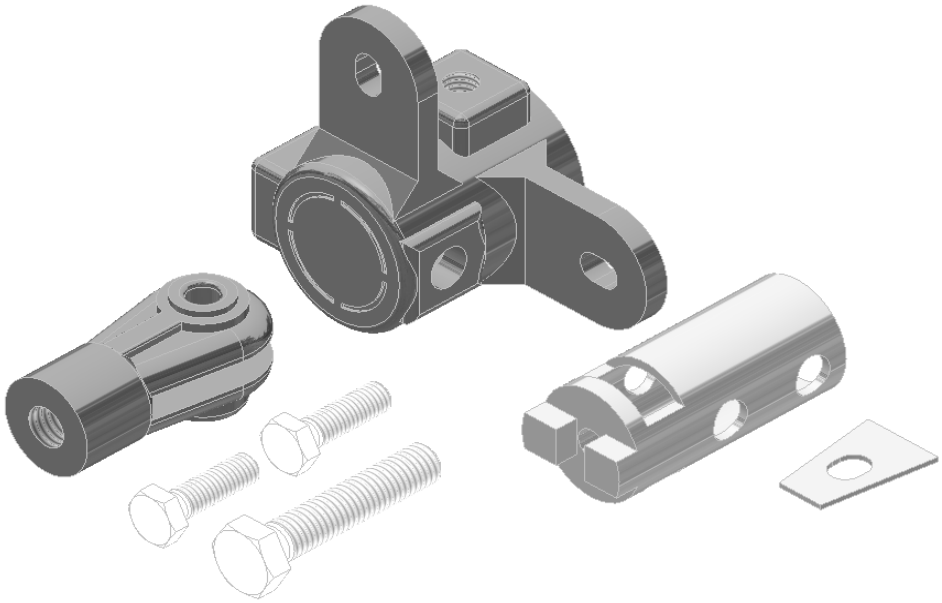

Figure 12
CBkit_ Interlock_1

3.2.5 Optional release cable coding

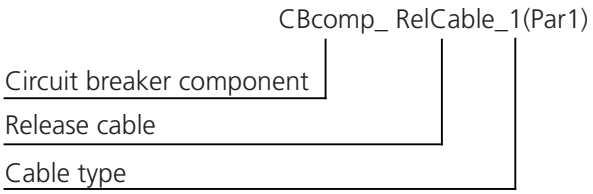

CBcomp_RelCable_1 is a flexible release cable used for interlock or ISM position indicator connection to the ISM.

Table 8 - Release cable parameters description

Parameter	Parameter description	Applicable options	Code
Par1	Cable length	1000 mm	1000

Par1
Parameter describes length of release cable.

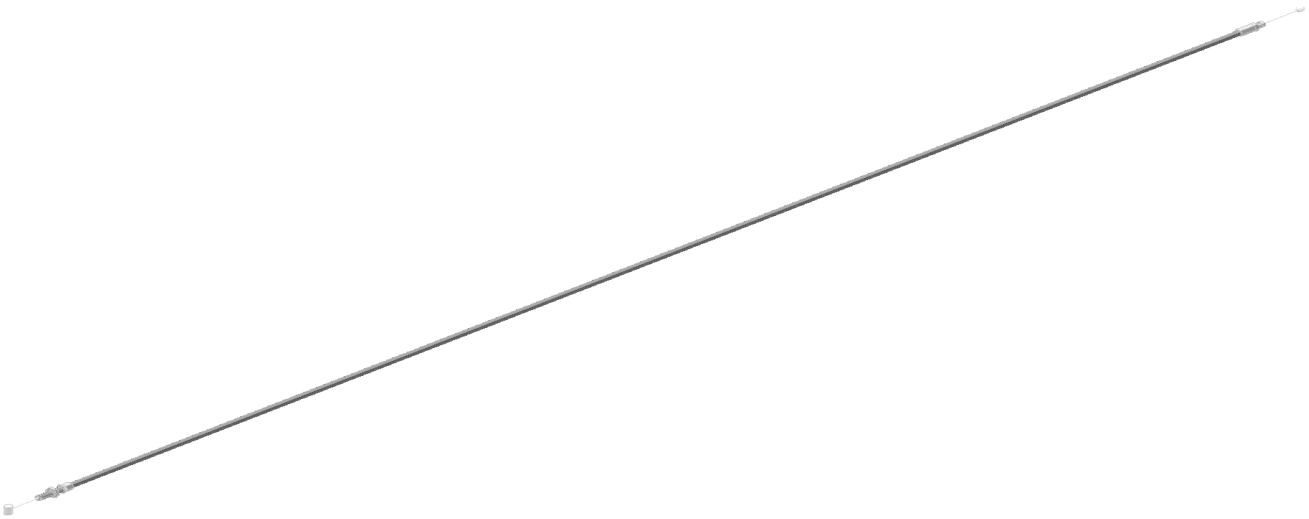

Figure 13
CBcomp_RelCable_1

3.2.6 Optional position indicator coding

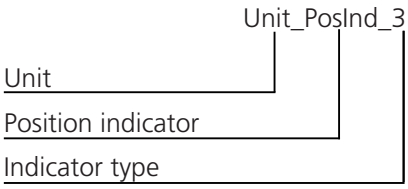

Unit_PosInd_3 is a position indicator used together with CBcomp_RelCable_1 to indicate the ISM main circuit position. VCB15_Shell2_16F and ISM15_Shell_2 already include CBcomp_RelCable_1(1000) and Unit_PosInd_3.

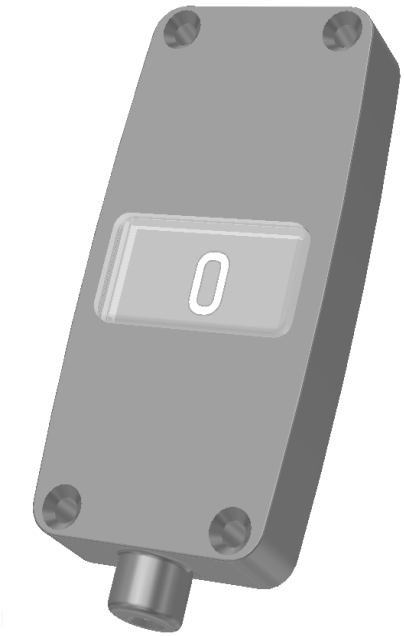

Figure 14
Unit_PosInd_3

3.2.7 Optional Manual Generator coding

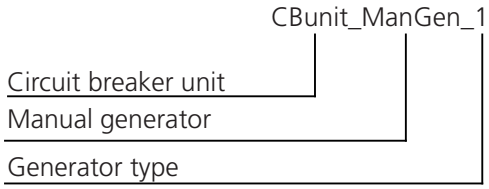

CBunit_ManGen is used to charge the CM_16_1 in cases where the main auxiliary power supply is not available.

Table 9 - Generator type description

Code	Description
1	Manual generator for use with CM_16_1(220_Par2_Par3)
2	Manual generator for use with CM_16_1(60_Par2_Par3)

Figure 15
CBunit_ ManGen_1 (CBunit_ ManGen_2)

Figure 16
Designation label

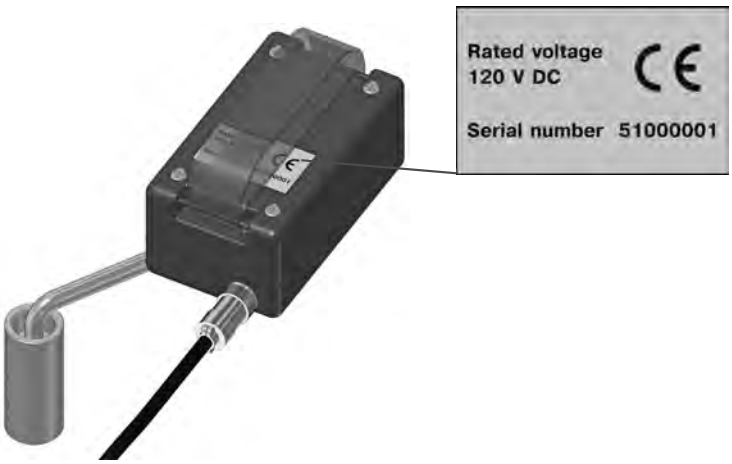

Figure 17
Serial number label

4. Technical parameters

Main technical data and circuit breaker technical parameters are presented in the tables below.

Table 10 - VCB technical parameters

Type	VCB15_LD	VCB15_Shell	VCB25_LD
Rated voltage (Ur)	≤ 12 kV	≤ 17.5 kV	≤ 24 kV
Rated normal current (Ir)	≤ 800 A	≤ 1250 A [1)] ≤ 2000 A	≤ 800 A
Rated power frequency withstand voltage (Ud)	28 (42) [2)] kV	38 (42) kV [2)]	50 kV
Rated lightning impulse withstand voltage (peak) (Up)	75 kV	95 kV [3)]	125 kV
Rated short-circuit breaking current (Isc)	≤ 20 kA [4)]	≤ 31.5 kA [4)]	≤ 16 kA [4)]
Rated peak withstand current (Ip)	≤ 50 kA	≤ 82 kA	≤ 40 kA
Rated short-time withstand current (Ik)	≤ 20 kA	≤ 31.5 kA	≤ 16 kA
Rated duration of short circuit (tk)	4 s		
Rated frequency (fr)	50/60 Hz		
Mechanical life (CO-cycles)	50 000 [5)]	30 000	
Maximum number of CO-cycles per hour	60		
Operating cycles, rated–short circuit breaking current	100	50	100
Closing time	≤ 70 ms	≤ 60 ms	≤ 70 ms
Opening time	≤ 35 ms	≤ 35 ms	≤ 35 ms
Break time	≤ 45 ms	≤ 45 ms	≤ 45 ms
Rated operating sequence	O-0.3s-CO-10s-CO-10s-CO [6)]		
Auxiliary circuits insulation strength [7)]			
Power frequency test voltage (1 min) according to IEC60255-27	2 kV		
Lightning impulse 1.2 m s/50 m s/0.5 J according to IEC60255-27	5 kV		
Insulation resistance, 1000V DC according to IEC60255-27	≥ 5 MOhm		
Design class of switching module with regard to severity of service conditions in accordance with IEC 60932	Class 1	Class 0	Class 0
Standards	IEC 62271-100 GB 1984- 2003	IEC 62271-100 GB 1984- 2003	IEC 62271-100
Mechanical vibration withstand capability according to IEC 60721-3-4	Class 4M4		
Resistance of main circuit	≤ 40 µOhm	≤ 18 µOhm	≤ 40 µOhm
Weight (depending on Pole centre distance) for three-phase ISM	34-36 kg	51-55 kg	35-38 kg
Weight for single phase ISM	13 kg	-	14 kg
Weight for CM	1 kg		
Overall dimensions of CM [8)]	190x165x45 mm		
Altitude above sea level	1000 m [9)]		
Relative humidity in 24 hours	≤ 95 %		
Relative humidity over 1 month	≤ 90 %		
Temperature Range	-25 °C ... +55 °C		
Degree of protection according to IEC 60529	IP40		
Type of driving mechanism	Monostable magnetic actuator		

Type	VCB15_LD	VCB15_Shell	VCB25_LD
Design, switching capacity of silver auxiliary contacts			
Number of available auxiliary contacts for three-phase ISM		6 NO + 6 NC	
Number of available auxiliary contacts for single-phase ISM		2 NO + 2 NC	
Minimum current for 12 V AC / DC, ohmic load		100 mA	
Minimum current for 12 V AC / DC, inductive load (t=20 ms, cosj =0,3)		100 mA	
Maximum current for 30 V DC, ohmic load		10 A [10)]	
Maximum current for 30 V DC, inductive load (t=20 ms)		3 A	
Maximum current for 60 V DC, ohmic load		0.9 A	
Maximum current for 60 V DC, inductive load (t=20 ms)		0.9 A	
Maximum current for 125 V DC, ohmic load		0.5 A	
Maximum current for 125 V DC, inductive load (t=20 ms)		0.03 A	
Maximum current for 250 V DC, ohmic load		0.25 A	
Maximum current for 250 V DC, inductive load (t=20 ms)		0.03 A	
Maximum current for 125 V AC, ohmic load		10 A [10)]	
Maximum current for 125 V AC, inductive load (cosj =0,3)		5 A	
Maximum current for 250 V AC, ohmic load		10 A [10)]	
Maximum current for 250 V AC, inductive load (cosj =0,3)		5 A	
Design, switching capacity of gold-plated auxiliary contacts			
Number of available auxiliary contacts for three-phase ISM	-	-	6 NO + 6 NC
Number of available auxiliary contacts for single-phase ISM		-	
Minimum current for 5 V AC / DC		1 mA	
Maximum current for 10 V AC / DC		300 mA	
Maximum current for 30 V AC / DC		100 mA	
Maximum voltage AC / DC		30 V	
CM reaction times			
Preparation time for the operation of the CM after switching on the auxiliary power supply		≤ 15 s	
Preparation time for the close operation of the CM after a previous close operation		≤ 10 s	
Preparation time for the trip operation of the CM after switching on the auxiliary power supply		≤ 0.1 s	
Trip capability after failure of the auxiliary power supply		≥ 60 s [11)]	
CM supply voltage			
Rated range of supply voltage of CM_16_1(60_x_x)		24V to 60V DC	
Rated range of supply voltage of CM_16_1(220_x_x)		110V to 220V AC/DC	
Operating range (80-120%) of CM_16_1(60_x_x)		19V to 72V DC	
Operating range (80-120%) of CM_16_1(220_x_x)		85V to 265V AC/DC	

Type	VCB15_LD	VCB15_Shell	VCB25_LD
Power consumption of CM			
Charging the close and trip capacitors of CM_16_1(60_x_x)	≤ 25 W		
Charging the close and trip capacitors of CM_16_1(220_x_x)	≤ 42 W AC[12)] ≤ 37 W DC		
Permanent power consumption (standby) of CM_16_1(60_x_x)	≤ 5 W		
Permanent power consumption (standby) of CM_16_1(220_x_x)	≤ 7 W AC [13)] ≤ 5 W DC		
Inrush current of of CM_16_1(60_x_x) with discharged capacitors	≤ 120 A		
Inrush current of of CM_16_1(220_x_x) with discharged capacitors	≤ 18 A		
Inrush time constant of CM_16_1(60_x_x) with discharged capacitors	≤ 0.5 ms		
Inrush time constant of CM_16_1(220_x_x) with discharged capacitors	≤ 4 ms		
Design, switching capacity of CM inbuilt relays			
Number of relays in CM	3		
Number of available contacts for one relay	1 NO + 1 NC with common point		
Rated voltage	240 V		
Rated current AC	16 A		
Maximum breaking power AC	4000 VA		
Maximum switching current 250V DC	0.35 A		
Maximum switching current 125V DC	0.45 A		
Maximum switching current 48V DC	1.3 A		
Maximum switching current 24V DC	12 A		
Switching time	5 ms		
“Close” and “Trip” dry contacts inputs of CM			
Output voltage	≥ 30 V		
Contacts closed current	≥ 50 mA		
Steady state current	≥ 5 mA		

1) For VCB ISM15_Shell with Low upper terminal – up to 1250 A, with High upper terminal – up to 2000 A.

2) The information in brackets refers to the national Chinese standards GB1984-2003 at an installation altitude of 1000 m maximum.

3) Parameter valid only when ISM is used with insulation caps. For details see dimensional drawings and accessory information.

4) At 40% d.c. component.

5) 20 000 CO - for ISM15_LD_6.

6) The number of sequential Close-Trip operations with a 10 second interval should not exceed 10. The number of Close-Trip operations should not exceed 60 per hour. Sequence of 10s Close-Trip operations can be repeated only after 260 s pause.

7) Isolation resistance check is not applicable for “Actuator Coil” circuits of CM.

8) Overall dimensions of ISM are given in Appendix 3.

9) Up to an installation altitude of 1000 m above sea level. Above 1000m, the external insulation measurement of the ISM must be increased by the atmospheric correction factor Ka according to IEC 62271-1 compared to the insulation measurement at sea level. The maximum allowed altitude is 2000 m above sea level.

10) At 5 min short-term duty. Continuous current – 5 A.

11) In case of Dry contacts “Close” and “Trip” are open.

12) At Cos j >0.66.

13) At Cos j >0.33.

Table 11 - CM EMC parameters

Parameter	Applicable standard	Rated Value
Electromagnetic compatibility (EMC) requirements [1]		
Electrostatic discharge	IEC 60255-26 IEC 61000-4-2	8 kV contact 15 kV air
Radiated EM field Immunity	IEC 60255-26 IEC 61000-4-3	80 MHz – 3 GHz Sweep & spot AM 1 kHz 80% 10 V/m
Fast transient burst Immunity	IEC 60255-26 IEC62271-1 IEC 61000-4-4	4 kV commom mode
Surge Immunity	IEC 60255-26 IEC 61000-4-5	4 kV commom mode 2 kV differential mode
Conducted disturbance induced by Radio frequency fields	IEC 60255-26 IEC 61000-4-6	150 kHz – 80 MHz AM 1 kHz 80% 10 V
Power Frequency Magnetic Field	IEC 60255-26 IEC 61000-4-8	100 A/m continuously 1000 A/m 1 sec
Pulse Magnetic Field	IEC 61000-4-9	1000 A/m
100 kHz Damped Oscillatory Magnetic Field	IEC 61000-4-10	100 A/m
1 MHz damped oscillatory magnetic field	IEC 61000-4-10	100 A/m
AC Voltage Dips and Interruptions	IEC 60255-26 IEC 61000-4-11	ΔU 30% 1 period ΔU 60% 50 periods ΔU 100% 5 periods ΔU 100% 50 periods
Power Frequency Disturbance Voltage	IEC 60255-26 IEC 61000-4-16	300 V common mode 150 V differential mode [2]
100 kHz and 1 MHz Damped Oscillatory Wave Immunity	IEC 60255-26 IEC 62271-1 IEC 61000-4-18	2.5 kV commom mode 1 kV differential mode
Ripple on DC Power Supply	IEC 60255-26 IEC 61000-4-27	10% of Supply voltage, 100 Hz
DC Voltage Dips and Interruptions	IEC 60255-26 IEC 62271-100 IEC 61000-4-29	ΔU 30% 2 sec ΔU 60% 2 sec ΔU 100% 0,3 sec ±20 % 10 sec

1) Cable from electronic relay to connector block should be shielded and the case grounded near the connector. The total length of unshielded wires from connector block to CM WAGO connector should not exceed 200 mm. Electromagnetic compatibility requirements are not applicable for the CM USB port as this port is used only for CM programming during production and not used under service conditions.

2) Test influence is not applicable for CM "Close" and "Trip" dry contacts.

5. Design and operation

5.1 Design

5.1.1 Indoor Switching Module

The VCB main component is the innovative Tavrida Electric Indoor Switching Module. Tavrida Electric has simplified the mechanical structure of the switching module to the greatest possible extent. It uses three single-coil magnetic actuators, one per pole. All switching elements are assembled along a single axis. All mechanical operations are therefore direct and linear. Three actuators are installed in a steel frame and mechanically linked by a synchronizing shaft.

This design eliminates failure modes caused by components in conventional technology such as gears, charging motors, and trip / closing coils.

Tavrida Electric manufactures vacuum interrupters that combine small dimensions with an extraordinarily long mechanical and electrical lifespan. The use of a specially designed axial magnetic field distribution provides even current density distribution over the contact surface and consequently a substantial improvement of vacuum interrupting performance.

The result is up to 50,000 CO cycles at rated current or up to 50 O-CO cycles at maximum short-circuit breaking current without replacing or adjusting any parts of the circuit breaker.

Tavrida Electric Vacuum Circuit Breakers are completely maintenance free over a total life expectancy of at least 30 years.

Light Duty ISM

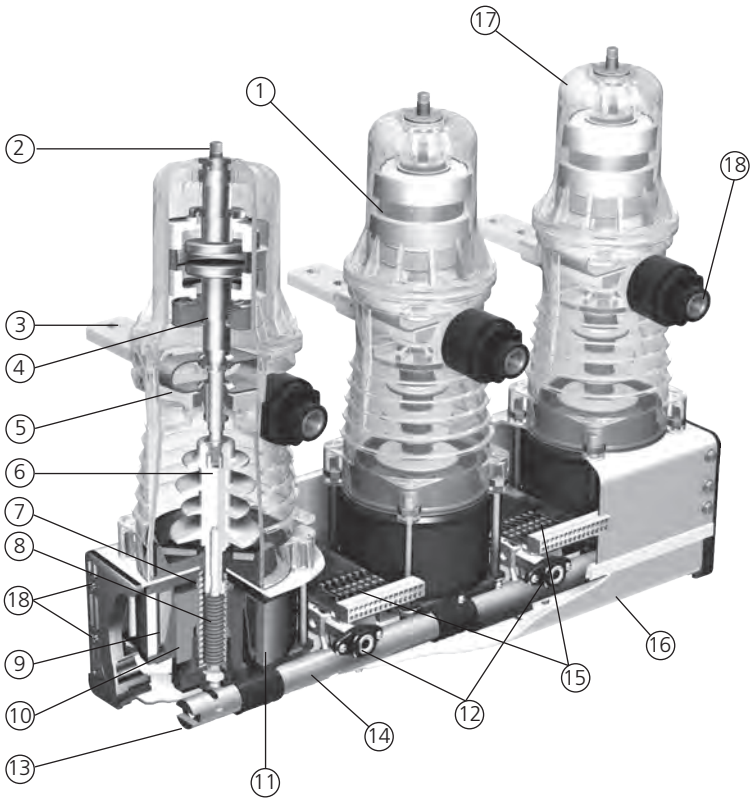

1. VI
2. Upper terminal
3. Lower terminal
4. Movable contact with bellows
5. Flexible junction shunt
6. Drive insulator
7. Opening springs
8. Contact pressure spring
9. Actuator coil
10. Armature
11. Magnetic actuator (complete module)
12. Interlocking pins
13. Stub shaft
14. Synchronizing shaft
15. Auxiliary contacts
16. Frame
17. Support insulator
18. Mounting points

Figure 18
LD ISM

Heavy Duty ISM

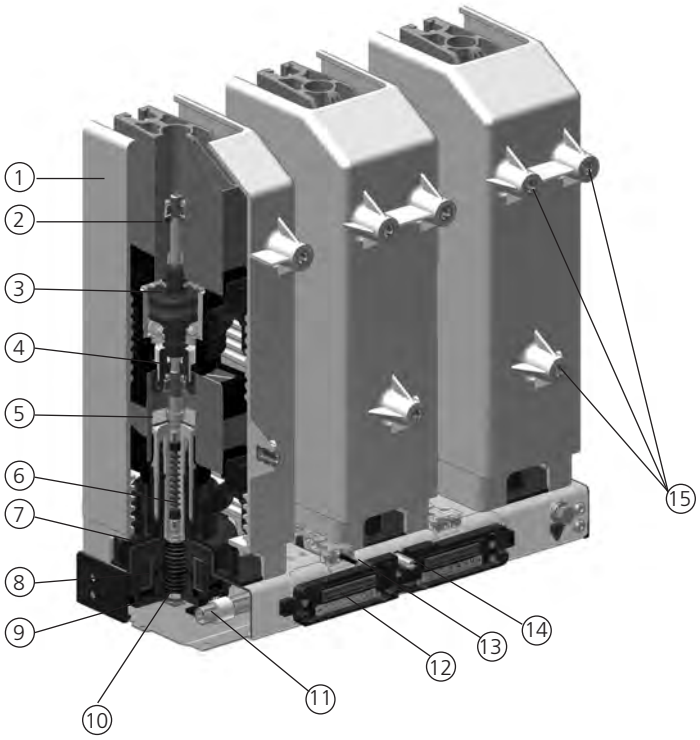

1. Support insulator
2. Upper terminal
3. Vacuum interrupter
4. Crown-type flexible contact
5. Lower terminal
6. Pulling insulator
7. Stator of actuator
8. Actuator coil
9. Armature of actuator
10. Opening and additional contact pressure springs
11. Synchronizing shaft
12. Auxiliary contacts
13. Main contacts position indicator actuator
14. Interlocking shaft
15. Mounting points

Figure 19
HD ISM

5.1.2 Control Module

Tavrida Electric Control modules provide the following advantages:

Low power consumption
A low energy level required to close or trip the ISM, no energy consumption by the ISM in its closed or open state and optimization of CM electrial diagrams leads to low CM power consumption - no more than 42 Watts during CM capacitors charging and no more than 7 Watts in standby mode.

Optimal ISM control
One CM can be applied to several different ISM types. The CM is programmed for use with a particular ISM type. The result is optimal ISM close and trip through a wide range of temperatures.

Self-diagnostic functionality
The CM has an internal self-diagnostic system that monitors ISM connection, power supply level and internal states of the CM. As a result, the CM can indicate issues by means of LEDs and built-in relays. The malfunction types are indicated by the number of corresponding LED blinks.

Wiring optimization
The CM controls the ISM main contact state via the same circuit used to close or trip the ISM. Therefore, only one circuit connection between ISM and CM is required. The CM can provide external circuits with information about ISM main contacts state by means of built in relays, which simplifies the switchgear secondary wiring significantly. The relay keeps its state after CM power supply disconnection.

Compact dimensions and small weight of CM
The compact size and weight of the CM (190x165x45 mm, 1.5 kg) simplifies the installation. The aluminum housing of the CM provides a high EMC level (Table 11).

The CM is delivered with mounting brackets for mounting on flat surfaces. The LED indicators are visible from two directions.

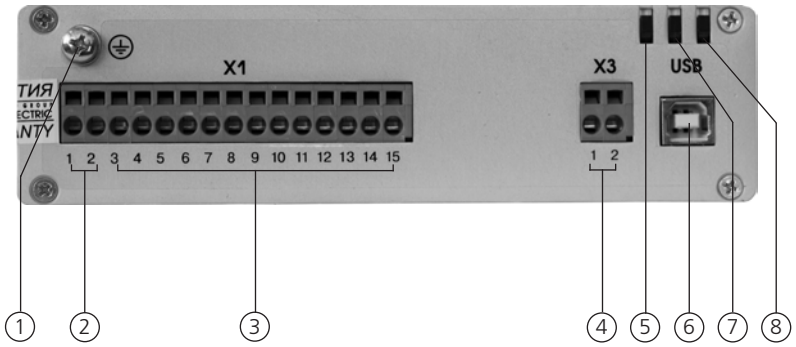

1. Earthing stud
2. Terminals for power supply
3. Terminals for I/O (control and indication)
4. Terminals for Switching Module
5. "Power" LED indicator
6. USB port
7. "Malfunction" LED indicator
8. "Ready" LED indicator

Figure 20
CM_16

5.1.3 Insulation kits

Tavrida Electric switching modules have a very compact design allowing for easy installation in many applications. Tavrida Electric offers several kits to ensure that external bus bar connection will not reduce the insulation level of the ISM.

CBkit_Ins_3
To comply with the rated impulse withstand voltage of 125 kV according to IEC 62271-1 it is recommended to cover the top connections of ISM25_LD_1 and ISM25_LD_3 with insulation kit CBkit_Ins_3. The arrangement is shown below. If the insulation cap set is not used, compliance with the rated insulation level must be verified by a dielectric test. Not applicable for ISM25_LD_2.

CBkit_Shell15_1
This kit is used to provide 95 kV BIL level between terminals of the ISM15_Shell_2. The external air insulation can withstand 75 kV BIL. The ISM15_Shell_2(150_L) requires CBkit_Shell15_1 for 75 kV BIL. CBkit_Shell15_1 also includes round copper bars and screws for flat bars connection to the ISM15_Shell_2 terminals. CBkit_Shell15_1 has two sets of bolts with different lengths, selection of their usage depends on the number of bars connected to ISM terminals - single or double bars.

CBkit_LD15_2 and CBkit_LD15_3
Kits CBkit_LD15_2 and CBkit_LD15_3 provide 75 kV BIL level for ISM15_LD_6 when this ISM is used as an LMT or AG16 Retrofit Draw-out type VCB. The kits also include plastic moulded parts to provide emergency (manual) trip and main contacts position indication. For details of these Retrofit Draw-out type VCB designs please contact your nearest Tavrida Electric office or Distributor.

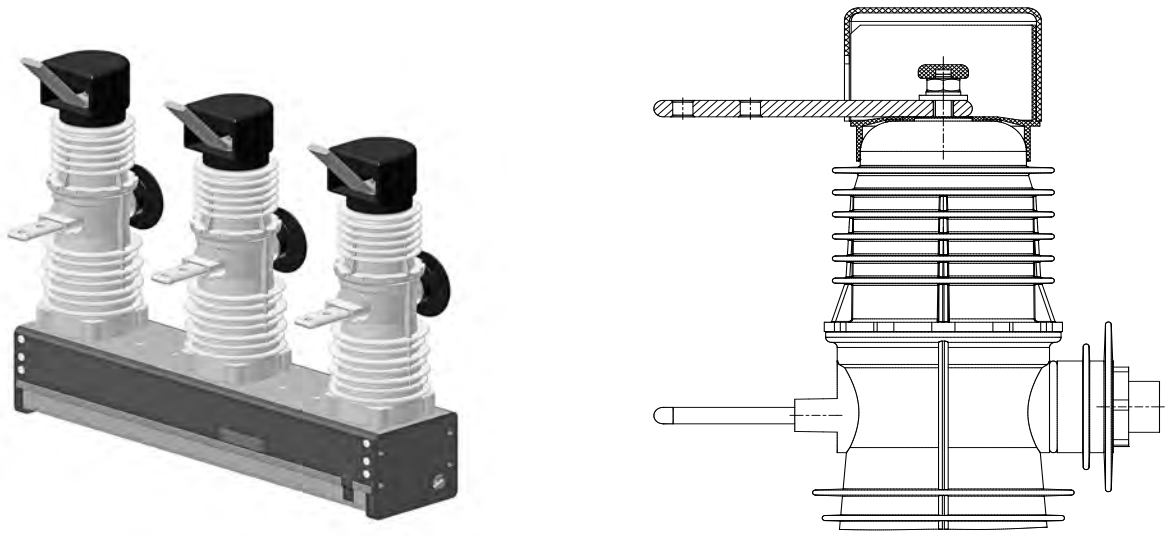

Figure 21

CBkit_Ins_3 installed on ISM25_LD

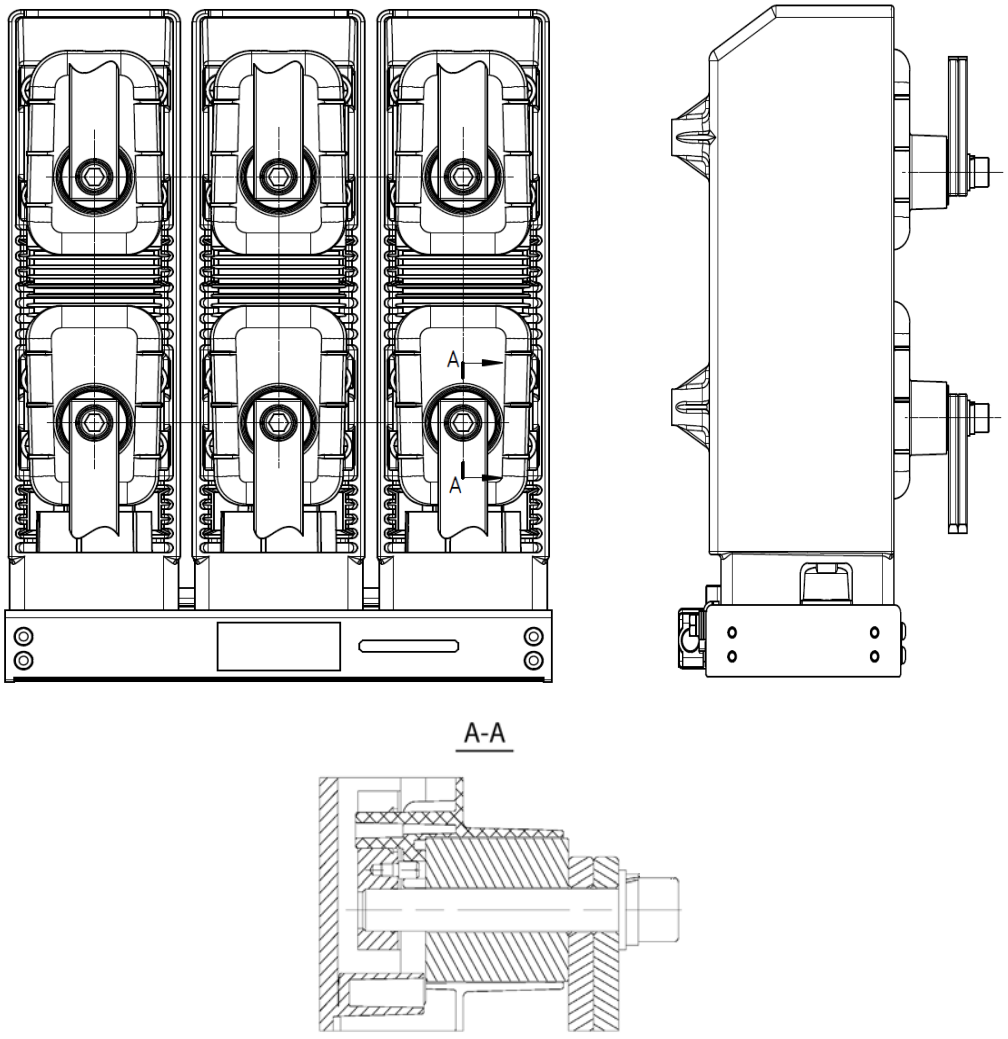

Figure 22

CBkit_Shell15_1(205) installed on ISM15_Shell_2(150_L)

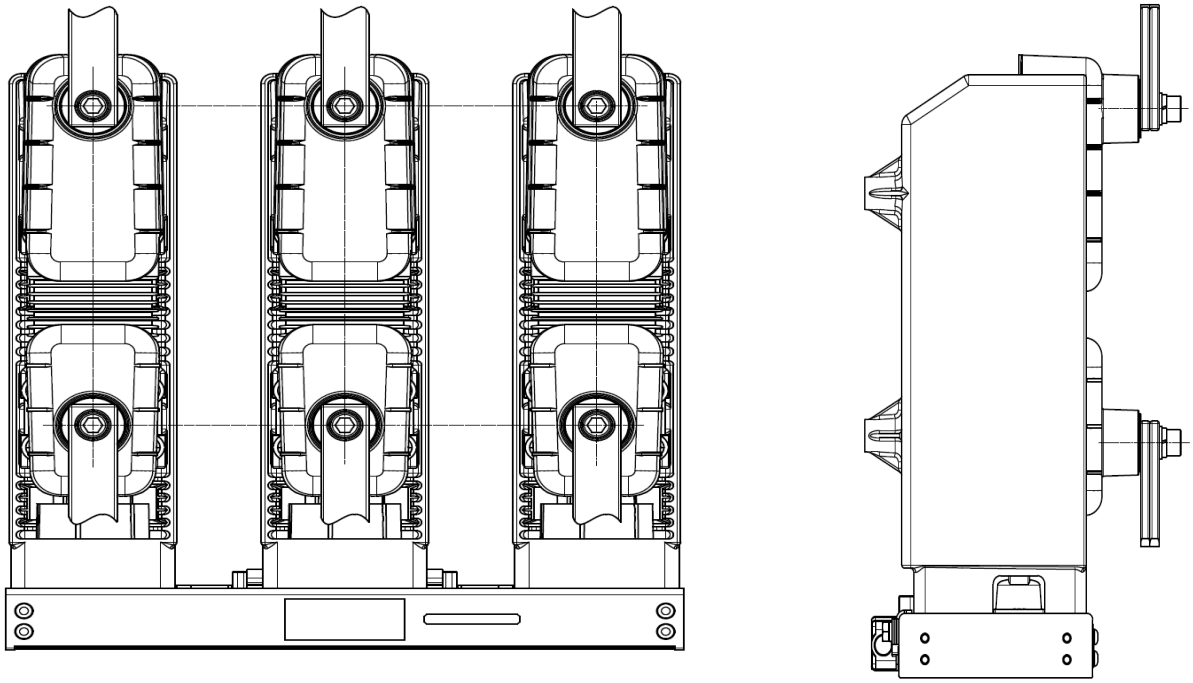

Figure 23

CBkit_Shell15_1(310) installed on ISM15_Shell_2(210_H)

5.1.4 Interlocking kits

CBkit_Interlock_1

This kit is used to link the ISM synchronizing shaft with mechanical interlocks. CBkit_Interlock_1 linked with ISM's shaft can provide information about ISM main contacts state (closed, open), emergency (mechanical) trip of ISM and mechanical blocking of ISM closing.

CBkit_Interlock_1 is optional for ISM15_LD_1 and ISM25_LD_1. ISM15_LD_3 and ISM25_LD_3 are already equipped with the CBkit_Interlock_1 pre-installed.

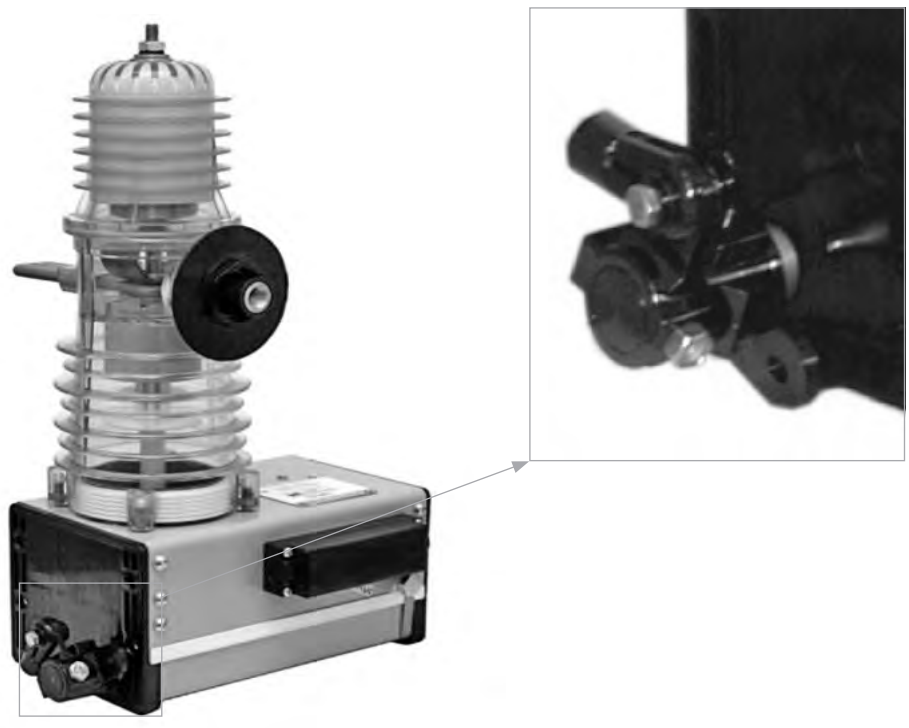

Figure 24

Interlocking kits installed on ISM25_LD_3

CBkit_Interlock_1 is not applicable for ISM15_Shell_2 and ISM15_LD_6.

5.1.5 Switching module main contacts position indicator

If position indicator is used Unit_PosInd_3 shall be connected to ISM with CBcomp_RelCable_1 to provide ISM main contact position indication. ISM15_Shell_2 already includes these components.

Figure 25
Unit_PosInd_3 with connected CBcomp_RelCable_1

5.2 Operation

5.2.1 Closing

To close the ISM main contacts, the CM close command shall be applied. It is a "dry contact" input so no external voltage should be applied.
The Close command will be accepted if:

- CM state is "Ready" (Ready LED flashes green);
- no Trip command is applied;
- optional electrical interlock is unlocked;
- mechanical and electrical interlock is unlocked (in case of ISM15_Shell_2 only).

If Close command is applied and held before the CM is in a "Ready" state the Close command will not be accepted. If auxiliary power is not available, the manual generator CBunit_ManGen shall be used to charge the CM capacitors and to close the ISM. Mechanical closing is not possible.

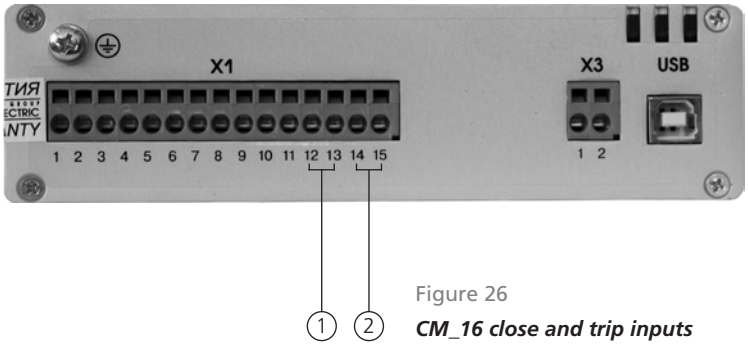

1. Close command input
2. Trip command input

Figure 26
CM_16 close and trip inputs

If Manual generators CBunit_ManGen are used to charge the CM, the Manual generator handle shall be rotated until the Ready LED of the CM flashes green (approximately 30 seconds). Then the ISM close command can be applied to the CM.

5.2.2 Opening

To open the ISM main circuits, a trip command should be applied to the CM trip command input. It is a "dry contact" input so no external voltage should be applied.
The trip command will be accepted if:
• CM state is "Ready" (Ready LED flashes green) or within 60 seconds after the removal of the auxiliary power supply;
• optional electrical interlock is unlocked;
• mechanical and electrical interlock is unlocked (in case of ISM15_Shell_2 only).
If the trip command is applied and kept before the CM is in a "Ready" state, the trip command will be accepted after CM is in a "Ready" state.

5.2.3 Emergency opening

The ISM can also be opened manually. When the synchronizing shaft is rotated, a force exceeding the magnetic attraction forces of the ring magnet is applied to the armature, which subsequently starts to move. As the air gap increases, the opening springs and the contact pressure springs overcome the magnetic holding force, and the vacuum interrupter opens.

To open the ISM15_LD and ISM25_LD manually, the force shall be applied to the interlocking pins or torque shall be applied to the stub shaft evenly during their movement - see Figure 18 above and Figure 27 below. Force shall be applied along the pin's movement axis and directed to the ISM frame. The torque shall be applied in the direction of shaft rotation during ISM opening. The force or torque influence shall not be applied at the end of pin's stroke or shaft rotation and shall not be applied to the pin or shaft before ISM closing.

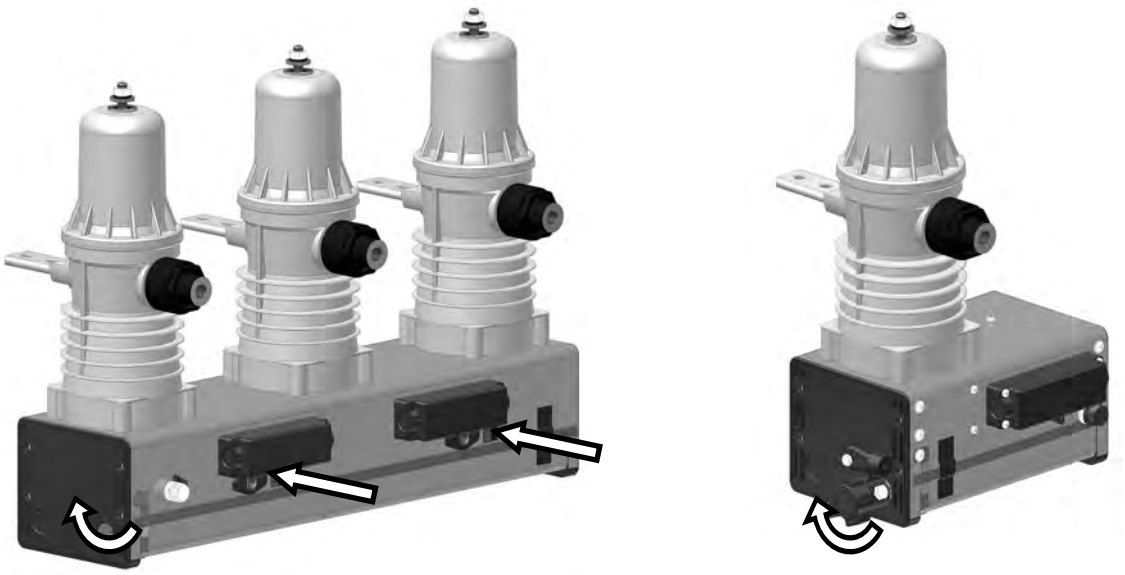

Figure 27

ISM15_LD and ISM25_LD manual trip execution.

Force or torque can be applied to any of the points shown below

To open the ISM15_Shell manually, the torque shall be applied to the interlocking shaft evenly during its movement - see Figure 19 above and Figure 28 below. The torque shall be applied counterclockwise of shaft rotation (90 degrees angle). The torque shall not be applied at the end of shaft rotation. ISM15_Shell_2 has a built in electrical interlock that interrupts the ISM coil circuit after the intelocking shaft is rotated counterclockwise. After manual trip, the shaft should be rotated clockwise to unlock the ISM.

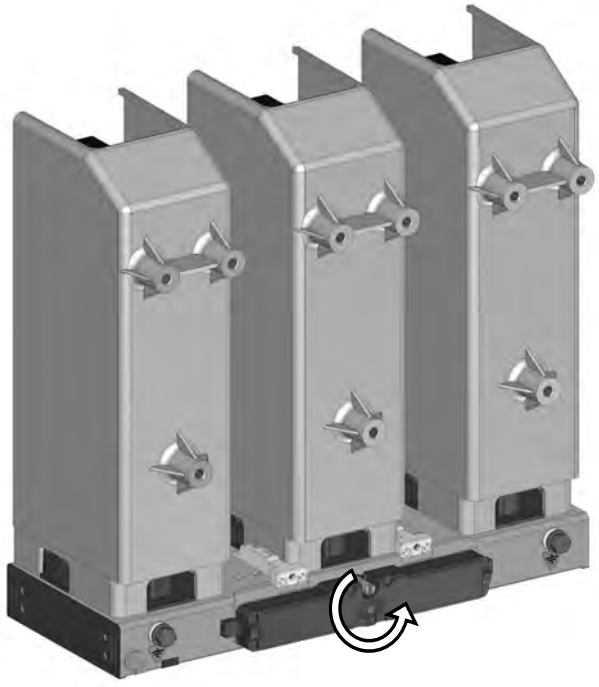

Figure 28

ISM15_Shell manual trip execution

6. Functionality

6.1 Indication

The VCB has the following indication functionality:

- indication provided by ISM:
  ISM main contacts position (mechanical indication) - Unit_PosInd_3 with connected CBcomp_RelCable_1;
  ISM main contacts position (electrical indication) - ISM auxiliary switches (6NO+6NC switches for three phase ISMs and 2NO+2NC - for single phase ISMs).
- indication provided by CM:
  ISM main contacts position (electrical indication) - one inbuilt CM relay (1 NO + 1 NC with common point);
  CM "Power" indication - LED indicator;
  CM "Ready" state indication - LED indicator and one built in CM relay (1 NO + 1 NC with common point);
  CM "Malfunction" state indication - LED indicator and one built in CM relay (1 NO + 1 NC with common point).

Parameters of allowed ISM auxiliary switch load and built in CM relays are given in Chapter 4.
The self-diagnostic system inside the CM detects possible malfunctions and reports them via the Malfunction LED blink signals and Malfunction or Loss of auxiliary supply Relay state. The explanation of the blink codes is given in Table 12.

Table 12 - CM self-diagnostic indication

CM state	Indication				
	LED Power	LED Ready	LED Malfunction	Relay Ready	Relay Malfunction or Loss of auxiliary supply
Power supply voltage is absent more than 3 minutes	off	off	off	O	C
"Close" operation is preparing	continuous	off	off	O	O
CM is ready and operable	continuous	continuous	off	C	O
Power supply voltage is absent for more than 1.5 seconds	off	continuous	1 blink	C	C
Excessive trip or close time	continuous	off	2 blinks	O	C
Actuator coil isolated	continuous	off	3 blinks	O	C
Short circuit of Actuator coil	continuous	off	4 blinks	O	C
Manual Trip and Lock	continuous	off	5 blinks	O	O
Overheat	continuous	off	6 blinks	O	O
State of ISM is not defined	continuous	off	7 blinks	O	C
Internal fault of the CM	continuous	off	continuous	O	C

Notes.

1. Number of blinks in series followed by 1.5 s intervals, continuous light or off state are shown for LED indicators.
2. State of relay contact groups (C – closed, O – opened) is indicated for NC Ready Relay and Malfunction or Loss of auxiliary supply Relay.
3. Period of checking Actuator Coil state (short circuit / isolated) – 10 s.

Priority of the fault indication starting from the highest one:

1. CM overheat ;
2. ISM state is open without command from the CM;
3. Excessive trip or close time;
4. Manual Trip and Lock;
5. Short circuit of Actuator coil;
6. Actuator coil isolated;
7. Power supply voltage is absent more than 1.5 seconds.

CM performs the checkup of ISM main contacts position and updates the "'ISM main contacts position" relay status in the following cases:

- In case Close command was applied from the CM. In this case the update is performed not later than in 150ms after ISM main contacts closing;
- In case Trip command was applied from the CM. In this case the update is performed not later than in 70ms after ISM main contacts opening;
- Periodically every 10s in case no Close or Open command was applied from the CM.

In case application project requires to define main contacts position faster than the timing mentioned above it is recommended to use auxiliary switches installed at the ISM.

7. Application notes

7.1 Configuration options

Number of lower terminals of ISM

The one lower main terminal (conventional terminal) of ISM is usually sufficient for standard applications, but there may be applications where the Switchgear is so compact that ISM terminals are used as bus bars, for example Ring main units in city electrical networks.

Figure 29

ISM with one lower main terminal

Figure 30

ISM with two lower main terminals

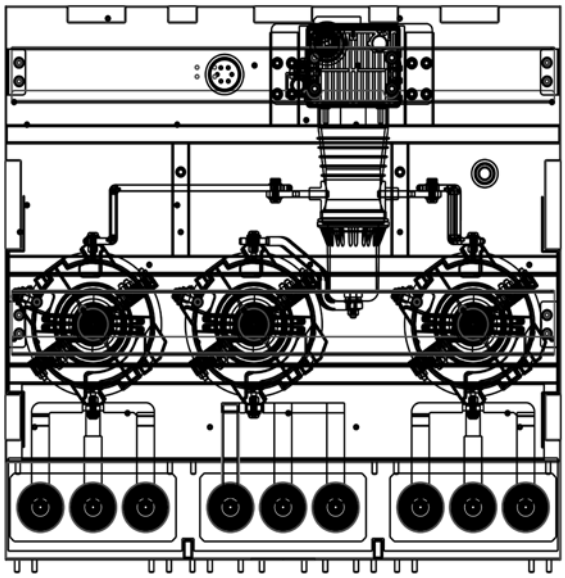

Figure 31

Example of ISM with two lower main terminals inside of SF-6 isolated Ring main unit

BIL level of ISM

The selection of BIL level of an ISM is related to the VCB and associated insulation parts kits, not necessarily to the ISM itself. Selection of either 75 kV or 95 kV BIL defines whether VCB15_Shell2_16F will be equipped with CBkit_Shell15_1. Only the VCB15_Shell2_16F with PCD 150 mm is always equipped with CBkit_Shell15_1(205) since distance between poles of ISM15_Shell_2(150_L) requires it at 75 kV BIL.

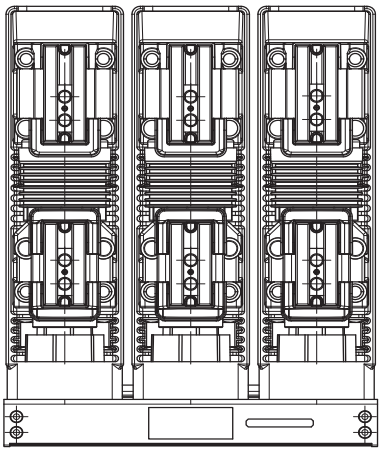

Figure 32

ISM15_Shell_2 without CBkit_Shell15_1:

- ***ISM15_Shell_2(150_L) - BIL 60 kV due to short distance between poles;***
- ***ISM15_Shell_2 with other PCD - BIL 75 kV.***

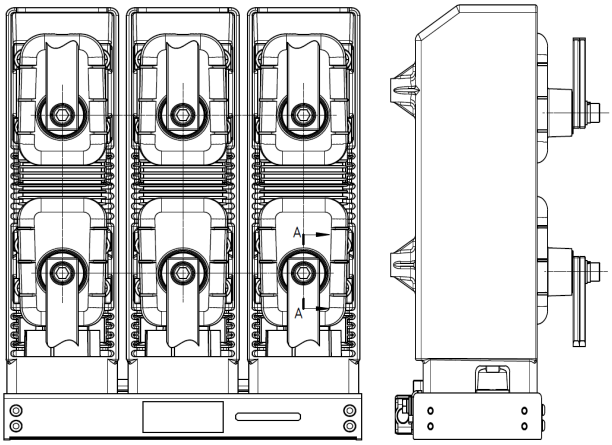

Figure 33

ISM15_Shell_2 with CBkit_Shell15_1 - BIL 95 kV for all variants of PCD

Selection of either 95 kV or 125 kV BIL defines whether VCB25_LD1_16F or VCB25_LD3_16F will be equipped with CBkit_Ins_3.

Figure 34

ISM25_LD_1, ISM25_LD_3 without CBkit_Ins_3 - BIL 95 kV

Figure 35

ISM25_LD_1, ISM25_LD_3 with CBkit_Ins_3 - BIL 125 kV

CBkit_Ins_3 used in place of bar connections to ISM upper teminals to provide 125 kV BIL. If another design is used, the rated insulation level shall be verified by a dielectric test.
CBkit_Ins_3 is not applicable for VCB25_LD2_16F as VCB25_LD2_16F is intended for usage inside of SF-6 isolated switchgear which already provide 125 kV BIL.

Rated voltage of auxiliary circuits

Selection of rated supply voltage range defines the rated supply voltage of the CM. Information about ranges of rated voltage of other VCB auxiliary circuits such as ISM auxiliary switches, CM built in relay switching contacts and CM control input circuits is given in Chapter 4.

7.2 Primary connections

7.2.1 ISM installation

In any switchgear application, the HD ISM shall may be installed in position “actuator up” or “actuator down”. The LD ISM can be installed in any position.

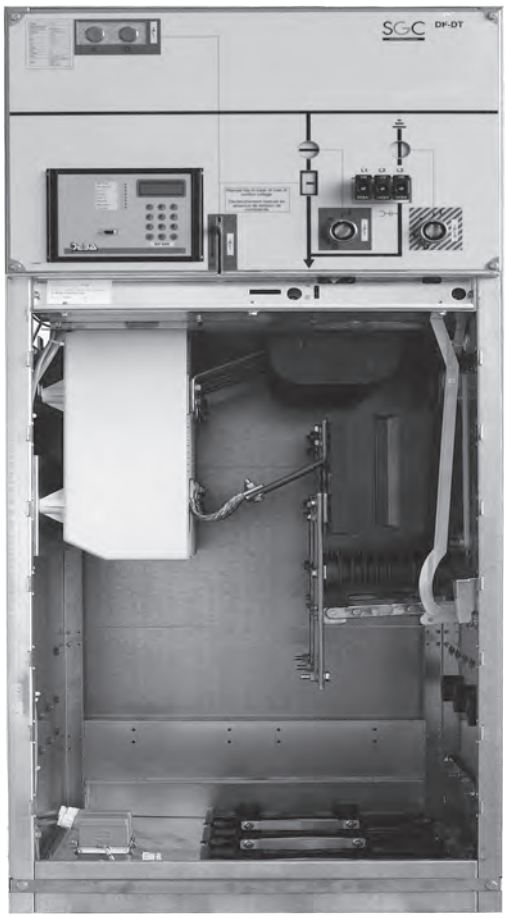

Figure 36
Fixed compact installation of HD ISM, vertical arrangement, actuator up

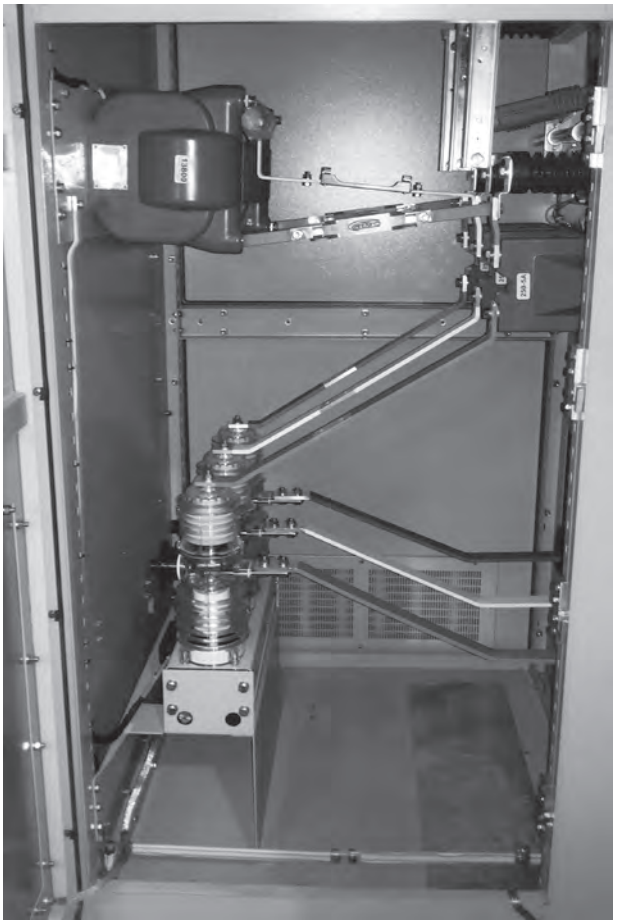

Figure 37
Fixed compact installation of LD ISM, vertical arrangement, actuator down

Points shown below should be used for mounting the ISM.

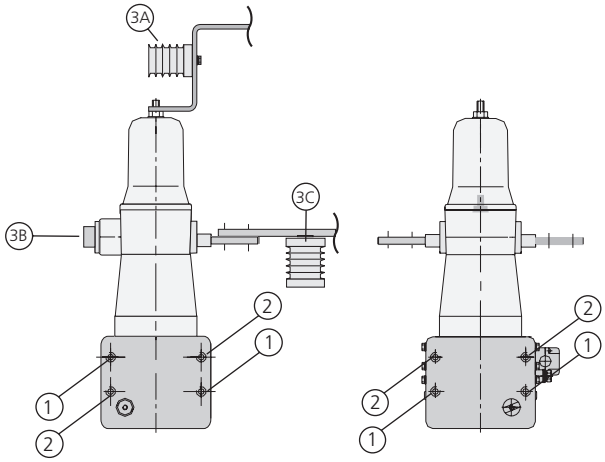

Figure 38
LD ISM mounting points

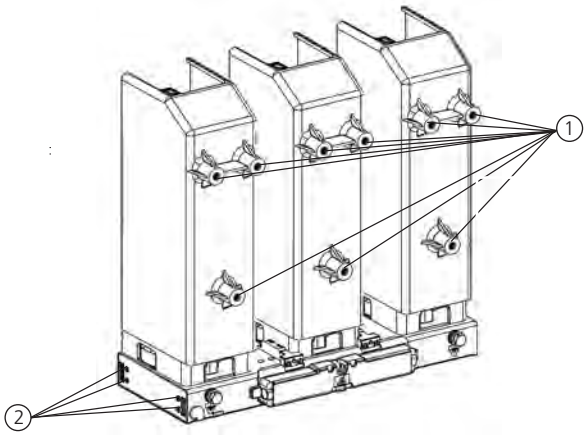

Figure 39
HD ISM mounting points

① Required mounting points

② Optional mounting points

③ Each two mounting points are required, either 3A+3B or 3A+3C

7.2.2 Minimum clearances due to electromagnetic influence

Short-circuit current magnetic field influences the ISM magnetic actuator. To avoid unwanted tripping, the minimum clearances between bus bars and the ISM frame should be not less than stated in Table 13.

Table 13 - Minimum clearances due to electromagnetic influence

Short circuit current	Minimum clearance (a)	Applicable for
≤ 20 kA	120 mm	LD ISM
25 kA	150 mm	HD ISM
31.5 kA	190 mm	HD ISM

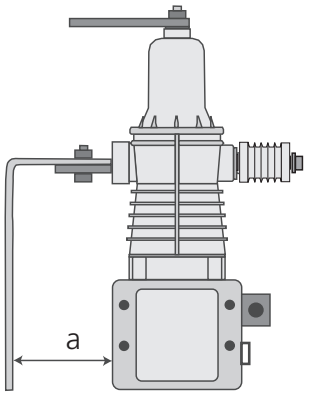

Figure 40
Electromagnetic clearances limitations

7.2.3 Minimum clearances due to rated insulation voltage

The recommended minimum phase-to-phase and phase-to-ground air clearances are stated in Table 14. Shorter clearances shall be verified by a voltage test.

Table 14 - Minimum clearances due to rated insulation voltage

Power frequency rated voltage	Impulse test voltage (BIL)	Minimum clearance (b) for LD ISM
12 kV	75 kV	120 mm
17.5 kV	95 kV	140 mm
24 kV	125 kV	220 mm

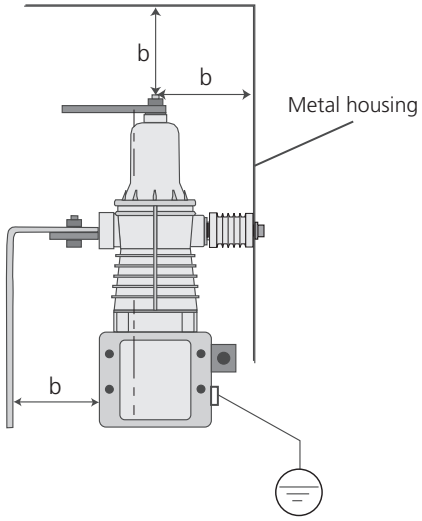

Figure 41
LD ISM insulating clearances limitations

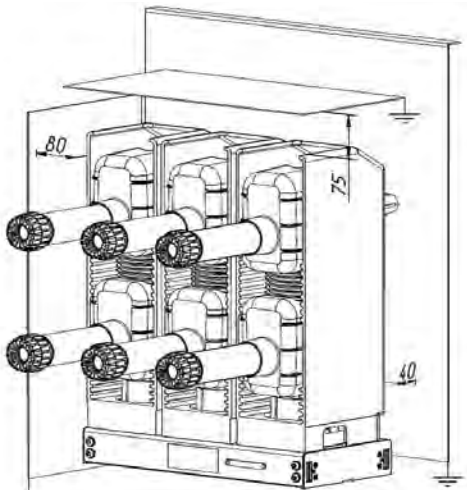

Figure 42
Insulating clearance limitations of HD ISM with low upper terminal

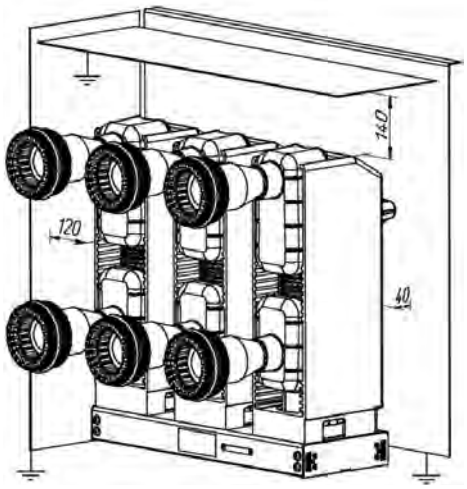

Figure 43
Insulating clearance limitations of HD ISM with high upper terminal

The minimum clearance between bus bars and the HD ISM frame shall be no less than 120 mm for 75 kV BIL and no less than 140 mm for 95 kV BIL.

Coordination of minimum clearances

Based on electromagnetic influence and rated insulation voltage, the greater clearance (a) should be selected.

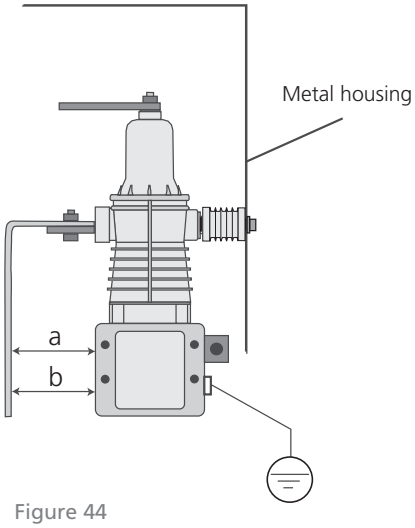

Figure 44
Clearance coordination

7.3 Secondary equipment

7.3.1 Three-phase ISM secondary connections

All three-phase ISMs have secondary connectors as shown below.

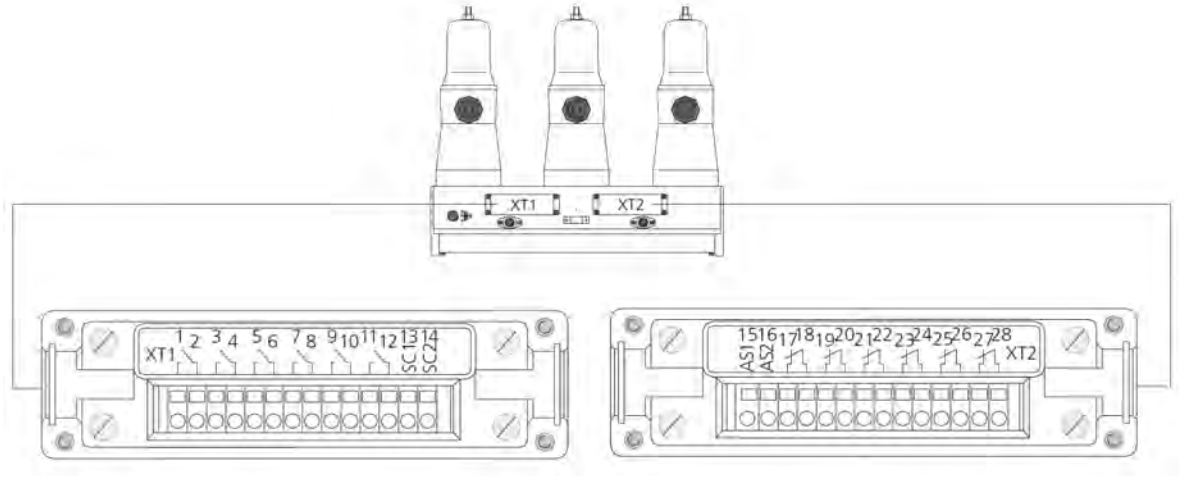

Figure 45

Terminal arrangement of the three-phase ISM

Table 15 - Three-phase ISM terminal arrangement

XT1		XT2	
Terminal No.	**Connection**	**Terminal No.**	**Connection**
1	Auxiliary switch S 1 (1)	15	Auxiliary switch S 13 (AS1)
2	Auxiliary switch S 1 (4)	16	Auxiliary switch S 13 (AS2)
3	Auxiliary switch S 2 (1)	17	Auxiliary switch S 7 (1)
4	Auxiliary switch S 2 (4)	18	Auxiliary switch S 7(2)
5	Auxiliary switch S 3 (1)	19	Auxiliary switch S 8 (1)
6	Auxiliary switch S 3 (4)	20	Auxiliary switch S 8 (2)
7	Auxiliary switch S 4 (1)	21	Auxiliary switch S 9 (1)
8	Auxiliary switch S 4 (4)	22	Auxiliary switch S 9 (2)
9	Auxiliary switch S 5 (1)	23	Auxiliary switch S 10 (1)
10	Auxiliary switch S 5 (4)	24	Auxiliary switch S 10 (2)
11	Auxiliary switch S 6 (1)	25	Auxiliary switch S 11 (1)
12	Auxiliary switch S 6 (4)	26	Auxiliary switch S 11 (2)
13	Actuator coil (SC1)	27	Auxiliary switch S 12 (1)
14	Actuator coil (SC2)	28	Auxiliary switch S 12 (2)

7.3.2 Single-phase ISM secondary connections

All single-phase ISMs have secondary connectors as shown below.

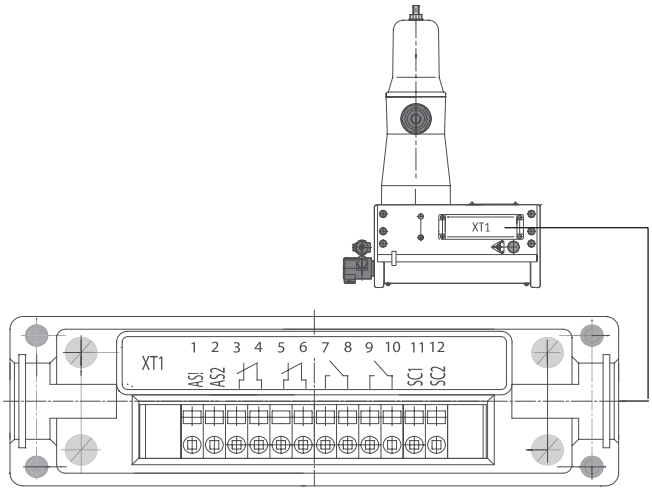

Figure 46

Terminal arrangement of the single-phase ISM

Table 16 - Single-phase ISM terminal arrangement

XT1	
Terminal No.	**Connection**
1	Auxiliary switch SF1 (AS1)
2	Auxiliary switch SF1 (AS2)
3	Auxiliary switch SF2
4	Auxiliary switch SF2
5	Auxiliary switch SF3
6	Auxiliary switch SF3
7	Auxiliary switch SF4
8	Auxiliary switch SF4
9	Auxiliary switch SF5
10	Auxiliary switch SF5
11	Actuator coil (SC1)
12	Actuator coil (SC2)

7.3.3 CM secondary connections

CM_16_1 has secondary connectors as shown below.

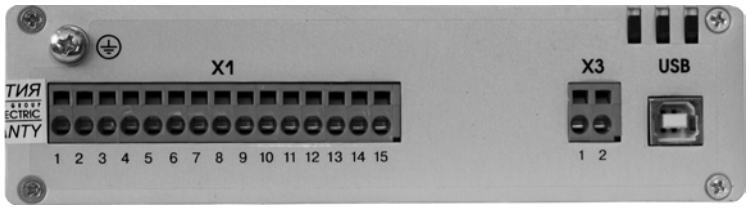

Figure 47
Terminal arrangement of the CM

Table 17 - CM terminal arrangement

X1		X3	
Terminal No.	Connection	Terminal No.	Connection
1	Power supply input (+)	1	Actuator coil output
2	Power supply input (-)	2	Actuator coil output
3	Relay output 1 NO		
4	Relay output 1 Com		
5	Relay output 1 NC		
6	Relay output 2 NO		
7	Relay output 2 Com		
8	Relay output 2 NC		
9	Relay output 3 NC		
10	Relay output 3 Com		
11	Relay output 3 NO		
12	Close input		
13	Close input		
14	Trip input		
15	Trip input		

CM relay functionality:
- Relay 1 - "ISM main contact position" relay;
- Relay 2 - "Ready" relay;
- Relay 3 - "Malfunction or Loss of auxiliary supply" relay.

Relay "ISM main contact position" keeps its state (1 NO and 1 NC contacts with common point) after CM power supply disconnection.
Relays functionality and number of relays with same functionality can be changed on request. Please contact the nearest Tavrida Electric sales representative for more information.

7.3.4 CM and ISM secondary connections

The CM is connected to the ISM actuator coil circuits only. The position of the ISM main contacts is determined by detecting the ISM coil inductance level. CM relay “ISM main contact position” indicates the result.

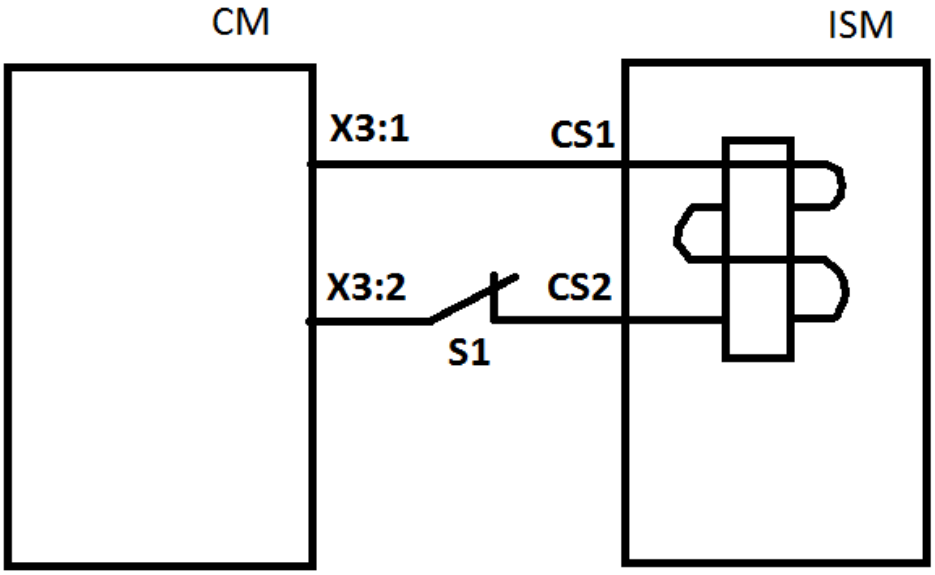

Figure 48
CM and ISM secondary connections

S1 - optional electrical interlock switch. Not required for ISM15_Shell_2 since the ISM has a built in electrical interlock.

7.4 Auxiliary supply

Connection of CM_16_1 to power supply is shown below.

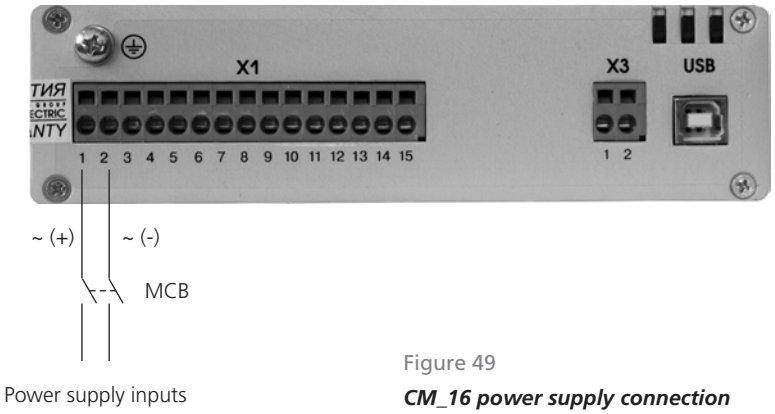

Figure 49

CM_16 power supply connection

Type of MCB shall be selected according to the CM. Consumption data given in Chapter 4.

If Manual generators CBunit_ManGen are used for charging, the CM DC voltage outputs shall be connected to power supply inputs of CM_16_1.

Appendix 1.
Type tests

Type tests of ISM15_LD

Standard	Chapter	Test name	Test center name	Test report
IEC 62271-100	6.2.6.1	Power-frequency withstand voltage test	KEMA	KEMA_70271147_000-HVL03-1032
IEC 62271-100	6.2.6.2	Lightning impulse withstand voltage test	KEMA	KEMA_70271147_000-HVL03-1032
IEC 62271-100	6.4	Measurement of the resistance of the main circuit	KEMA	KEMA_70271147_000-HVL03-1032
IEC 62271-100	6.5	Temperature-rise tests	KEMA	KEMA_70271147_000-HVL03-1032
IEC 62271-100	6.6	Short-time withstand current and peak withstand current tests	KEMA	KEMA_79-03
IEC 62271-100 IEC 60694	6.10 6.2.10	Additional tests on auxiliary and control circuits	KEMA	KEMA_70271147_000-HVL03-1032
IEC 60056		Mechanical operation test at ambient temperature	KEMA TEL Testlab	KEMA_267-03 EDRTL_321-2007E
IEC 62271-100	6.102-6.106	Short-circuit current making and breaking tests	KEMA	KEMA_79-03
IEC 62271-100	6.108	Single-phase earth fault test	KEMA	KEMA_79-03
IEEE C37.09	Table 1	Short-circuit current making and breaking tests	KEMA	KEMA_26-08 V1
IEEE C37.09	4.9.1	Load current switching test	KEMA	KEMA_26-08 V1
IEC 62271-100	6.111.5.1	Cable charging current switching test	KEMA	KEMA_438-03
IEEE C37.09	Table 2	Cable charging current switching test	KEMA	KEMA_27-08 V1
EEE C37.09	Table 2	Capacitor switching current tests	KEMA	KEMA_27-08 V1

Type tests of ISM15_Shell

Standard	Chapter	Test name	Test center name	Test report
IEC 62271-100	6.2.6.1	Power-frequency withstand voltage test	CESI	CESI_B2023637
IEC 62271-100	6.2.6.2	Lightning impulse withstand voltage test	CESI	CESI_B2023637
IEC 62271-100	6.4	Measurement of the resistance of the main circuit	CESI	CESI_B2021760 CESI_B2024116
IEC 62271-100	6.5	Temperature-rise tests	CESI	CESI_B2021760 CESI_B2024116
IEC 62271-100	6.6	Short-time withstand current and peak withstand current tests	CESI	CESI_B3001808
IEC 62271-100	6.10 6.2.10	Additional tests on auxiliary and control circuits	XIHARI	XIHARI_120442G
IEC 62271-100	6.101.2	Mechanical operation test at ambient temperature	CESI XIHARI	CESI_B2025746 XIHARI_120442G
IEC 62271-100	6.102 - 6.106	Short-circuit current making and breaking tests	CESI	CESI_B3001808
IEC 62271-100	6.112	Short-circuit current making and breaking tests, E2 class	CESI	CESI_B3001808
IEC 62271-100	6.108	Single-phase and double-earth fault tests	CESI	CESI_B3001808
GB 1984-2003	6.108	Cable charging current switching test	XIHARI	XIHARI_120442G

Type tests of ISM25_LD

Standard	Chapter	Test name	Test center name	Test report
IEC 62271-100	6.2.6.1	Power-frequency withstand voltage test	KEMA	KEMA_08-64919A
IEC 62271-100	6.2.6.2	Lightning impulse withstand voltage test	KEMA	KEMA_08-64919A
IEC 62271-100	6.4	Measurement of the resistance of the main circuit	KEMA	KEMA_08-64919A
IEC 62271-100	6.5	Temperature-rise tests	KEMA	KEMA_08-64919A
IEC 62271-100	6.6	Short-time withstand current and peak withstand current tests	CESI	CESI_A6031643
IEC 62271-100	6.10	Additional tests on auxiliary and control circuits	KEMA	KEMA_08-64919A
IEC 62271-100	6.101.2.1-6.101.2.3	Mechanical operation test at ambient temperature	KEMA TEL Testlab	KEMA_08-64919A Pr143-2012E
IEC 62271-100	6.102 - 6.106	Short-circuit current making and breaking tests	CESI	CESI_A6033726 CESI_A6031643
IEC 62271-100	6.2.9	Partial discharge tests	CESI	CESI_A6029041
IEC 62271-100	6.111.5.1	Cable charging current switching test	CESI	CESI_A6033728 CESI_A6031640 CESI_A6031641
IEC 62271-100	6.112	Short-circuit current making and breaking tests, E2 class	CESI	CESI_A6032098
IEC 62271-100	6.108	Single-phase and double-earth fault tests	CESI	CESI_A6033726 CESI_A6031643

Type tests of CM_16

Standard	Test name	Test center name	Test report
IEC 60255-26 IEC 61000-4-2	Electrostatic discharge immunity test	KEMA	KEMA TIC 1371-14
IEC 60255-26 IEC 61000-4-3	Radiated electromagnetic field immunity test	KEMA	KEMA TIC 1371-14
IEC 60255-26 IEC 62271-1 IEC 61000-4-4	Fast transient burst immunity test	KEMA	KEMA TIC 1371-14
IEC 60255-26 IEC 61000-4-5	Surge immunity test	KEMA	KEMA TIC 1371-14
IEC 60255-26 IEC 61000-4-6	Conducted disturbance induced by radio frequency fields immunity test	KEMA	KEMA TIC 1371-14
IEC 60255-26 IEC 61000-4-8	Power frequency magnetic field immunity test	KEMA	KEMA TIC 1371-14
IEC 61000-4-9	Pulse magnetic field immunity test	KEMA	KEMA TIC 1371-14
IEC 61000-4-10	100 kHz damped oscillatory magnetic field immunity test	KEMA	KEMA TIC 1371-14
IEC 61000-4-10	1 MHz damped oscillatory magnetic field immunity test	KEMA	KEMA TIC 1371-14
IEC 60255-26 IEC 61000-4-11	AC voltage dips and interruptions immunity test	KEMA	KEMA TIC 1371-14
IEC 60255-26 IEC 61000-4-16	Power frequency disturbance voltage immunity test	KEMA	KEMA TIC 1371-14
IEC 60255-26 IEC 62271-1 IEC 61000-4-18	100 kHz damped oscillatory wave immunity test	KEMA	KEMA TIC 1371-14
IEC 60255-26 IEC 62271-1 IEC 61000-4-18	1 MHz damped oscillatory wave immunity test	KEMA	KEMA TIC 1371-14
IEC 60255-26 IEC 61000-4-27	Ripple on DC power supply immunity test	KEMA	KEMA TIC 1371-14
IEC 60255-26 IEC 62271-100 IEC 61000-4-29	DC voltage dips and interruptions immunity test	KEMA	KEMA TIC 1371-14
IEC 60255-27 IEC 62271-100	Power frequency withstand voltage test	KEMA	KEMA TIC 1371-14
IEC 60255-27	Insulation resistance test	KEMA	KEMA TIC 1371-14
IEC 60255-27	Impulse withstand voltage test	KEMA	KEMA TIC 1371-14

Appendix 2. Product range

VCB Product range, delivery sets and package parameters

VCB designation	Item	Quantity	Package dimensions (LxWxH), mm	Gross weight, kg	Net weight, kg
VCB15_LD1_16F(CB_12_20_800_210_1_60_No)	ISM15_LD_1(55) CM_16_1(60_CB_1)	1 1	645x290x550	39.1	37
VCB15_LD1_16F(CB_12_20_800_210_1_220_No)	ISM15_LD_1(55) CM_16_1(220_CB_1)	1 1	645x290x550	39.1	37
VCB15_LD1_16F(CB_12_20_800_150_1_60_No)	ISM15_LD_1(67) CM_16_1(60_CB_1)	1 1	645x290x550	37.1	35
VCB15_LD1_16F(CB_12_20_800_150_1_220_No)	ISM15_LD_1(67) CM_16_1(220_CB_1)	1 1	645x290x550	37.1	35
VCB15_LD1_16F(CB_12_20_800_150_2_60_No)	ISM15_LD_1(80) CM_16_1(60_CB_1)	1 1	645x330x550	39.1	37
VCB15_LD1_16F(CB_12_20_800_150_2_220_No)	ISM15_LD_1(80) CM_16_1(220_CB_1)	1 1	645x330x550	39.1	37
VCB15_LD1_16F(CB_12_20_800_180_1_60_No)	ISM15_LD_1(90) CM_16_1(60_CB_1)	1 1	645x290x550	39.1	37
VCB15_LD1_16F(CB_12_20_800_180_1_220_No)	ISM15_LD_1(90) CM_16_1(220_CB_1)	1 1	645x290x550	39.1	37
VCB15_LD3_16F(CB_12_20_800_NA_1_60_No)	ISM15_LD_3 CM_16_1(60_CB_2)	1 1	645x290x550	17.1	14
VCB15_LD3_16F(CB_12_20_800_NA_1_220_No)	ISM15_LD_3 CM_16_1(220_CB_2)	1 1	645x290x550	17.1	14
VCB15_LD6_16RD(CB_12_20_630_133_1_60_AG16)	ISM15_LD_6 CM_16_1(60_CB_1) CBkit_LD15_3	1 1 1	470x410x700	62.3	59.3
VCB15_LD6_16RD(CB_12_20_630_133_1_220_AG16)	ISM15_LD_6 CM_16_1(220_CB_1) CBkit_LD15_3	1 1 1	470x410x700	62.3	59.3
VCB15_LD6_16RD(CB_12_20_630_133_1_60_LMT)	ISM15_LD_6 CM_16_1(60_CB_1) CBkit_LD15_2	1 1 1	470x410x700	60.8	57.8
VCB15_LD6_16RD(CB_12_20_630_133_1_220_LMT)	ISM15_LD_6 CM_16_1(220_CB_1) CBkit_LD15_2	1 1 1	470x410x700	60.8	57.8
VCB15_Shell2_16F(CB_17.5_31.5_1250_150_1_60_No)	ISM15_Shell_2(150_L) CM_16_1(60_CB_3) CBkit_Shell15_1(205)	1 1 1	790x275x800	66.3	60.9
VCB15_Shell2_16F(CB_17.5_31.5_1250_150_1_220_No)	ISM15_Shell_2(150_L) CM_16_1(220_CB_3) CBkit_Shell15_1(205)	1 1 1	790x275x800	66.3	60.9
VCB15_Shell2_16F(CB_12_31.5_1250_210_1_60_No)	ISM15_Shell_2(210_L) CM_16_1(60_CB_3)	1 1	790x275x600	57.1	53
VCB15_Shell2_16F(CB_12_31.5_1250_210_1_220_No)	ISM15_Shell_2(210_L) CM_16_1(220_CB_3)	1 1	790x275x600	57.1	53
VCB15_Shell2_16F(CB_17.5_31.5_1250_210_1_60_No)	ISM15_Shell_2(210_L) CM_16_1(60_CB_3) CBkit_Shell15_1(205)	1 1 1	790x275x800	66.4	61.9
VCB15_Shell2_16F(CB_17.5_31.5_1250_210_1_220_No)	ISM15_Shell_2(210_L) CM_16_1(220_CB_3) CBkit_Shell15_1(205)	1 1 1	790x275x800	66.4	61.9

VCB designation	Item	Quantity	Package dimensions (LxWxH), mm	Gross weight, kg	Net weight, kg
VCB15_Shell2_16F(CB_12_31.5_2000_210_1_60_No)	ISM15_Shell_2(210_H) CM_16_1(60_CB_3)	1 1	790x275x600	58.6	62.5
VCB15_Shell2_16F(CB_12_31.5_2000_210_1_220_No)	ISM15_Shell_2(210_H) CM_16_1(220_CB_3)	1 1	790x275x600	58.6	62.5
VCB15_Shell2_16F(CB_17.5_31.5_2000_210_1_60_No)	ISM15_Shell_2(210_H) CM_16_1(60_CB_3) CBkit_Shell15_1(310)	1 1 1	790x275x800	67.4	62.9
VCB15_Shell2_16F(CB_17.5_31.5_2000_210_1_220_No)	ISM15_Shell_2(210_H) CM_16_1(220_CB_3) CBkit_Shell15_1(310)	1 1 1	790x275x800	67.4	62.9
VCB15_Shell2_16F(CB_12_31.5_2000_275_1_60_No)	ISM15_Shell_2(275_H) CM_16_1(60_CB_3)	1 1	790x275x600	59.1	56
VCB15_Shell2_16F(CB_12_31.5_2000_275_1_220_No)	ISM15_Shell_2(275_H) CM_16_1(220_CB_3)	1 1	790x275x600	59.1	56
VCB15_Shell2_16F(CB_17.5_31.5_2000_275_1_60_No)	ISM15_Shell_2(275_H) CM_16_1(60_CB_3) CBkit_Shell15_1(310)	1 1 1	790x275x800	68.4	64.9
VCB15_Shell2_16F(CB_17.5_31.5_2000_275_1_220_No)	ISM15_Shell_2(275_H) CM_16_1(220_CB_3) CBkit_Shell15_1(310)	1 1 1	790x275x800	68.4	64.9
VCB25_LD1_16F(CB_17.5_16_800_210_1_60_No)	ISM25_LD_1(210_S) CM_16_1(60_CB_4)	1 1	645x290x550	39.1	37
VCB25_LD1_16F(CB_17.5_16_800_210_1_220_No)	ISM25_LD_1(210_S) CM_16_1(220_CB_4)	1 1	645x290x550	39.1	37
VCB25_LD1_16F(CB_24_16_800_210_1_60_No)	ISM25_LD_1(210_S) CM_16_1(60_CB_4) CBkit_Ins_3	1 1 3	645x290x550	39.7	37.6
VCB25_LD1_16F(CB_24_16_800_210_1_220_No)	ISM25_LD_1(210_S) CM_16_1(220_CB_4) CBkit_Ins_3	1 1 3	645x290x550	39.7	37.6
VCB25_LD1_16F(CB_24_12.5_630_210_1_60_DY800)	ISM25_ LD_1(210_G_1) CM_16_1(60_CB_4)	1 1	645x290x550	39.1	37
VCB25_LD1_16F(CB_24_16_800_275_1_60_No)	ISM25_LD_1(210_S) CM_16_1(60_CB_4) CBkit_Ins_3	1 1 3	775x290x550	41.7	39.6
VCB25_LD1_16F(CB_24_16_800_275_1_220_No)	ISM25_LD_1(210_S) CM_16_1(220_CB_4) CBkit_Ins_3	1 1 3	775x290x550	41.7	39.6
VCB25_LD2_16F (CB_24_16_630_150_1_60_No)	ISM25_LD_2(1) CM_16_1(60_CB_4)	1 1	645x290x550	38.1	36
VCB25_LD2_16F (CB_24_16_630_150_1_220_No)	ISM25_LD_2(1) CM_16_1(220_CB_4)	1 1	645x290x550	38.1	36
VCB25_LD2_16F (CB_24_16_630_150_2_60_No)	ISM25_LD_2(2) CM_16_1(60_CB_4)	1 1	645x330x550	40.1	38
VCB25_LD2_16F (CB_24_16_630_150_2_220_No)	ISM25_LD_2(2) CM_16_1(220_CB_4)	1 1	645x330x550	40.1	38
VCB25_LD3_16F(CB_24_16_800_NA_1_60_No)	ISM25_LD_3 CM_16_1(60_CB_5) CBkit_Ins_3	1 1 1	645x290x550	18.3	15.2
VCB25_LD3_16F(CB_24_16_800_NA_1_220_No)	ISM25_LD_3 CM_16_1(220_CB_5) CBkit_Ins_3	1 1 1	645x290x550	18.3	15.2

Appendix 3.
Overall drawings

Dimensions of Indoor Switching Modules

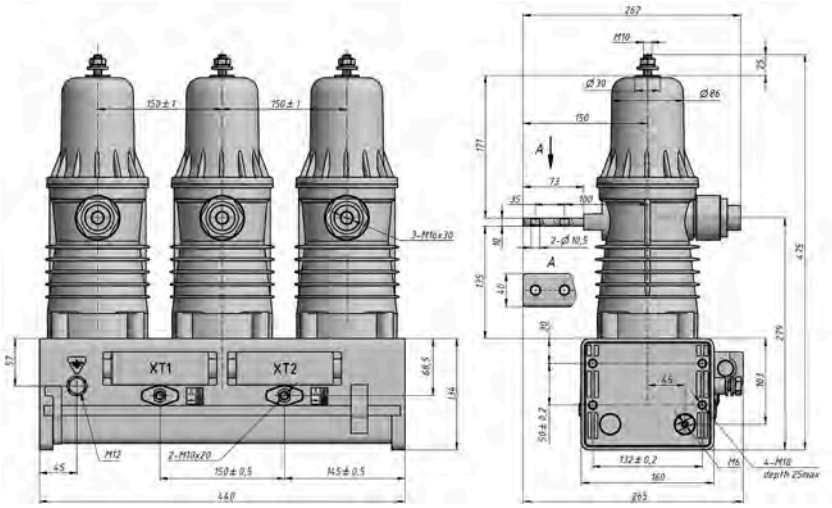

ISM15_LD_1(67),
PCD 150 mm
Weight: 34 kg

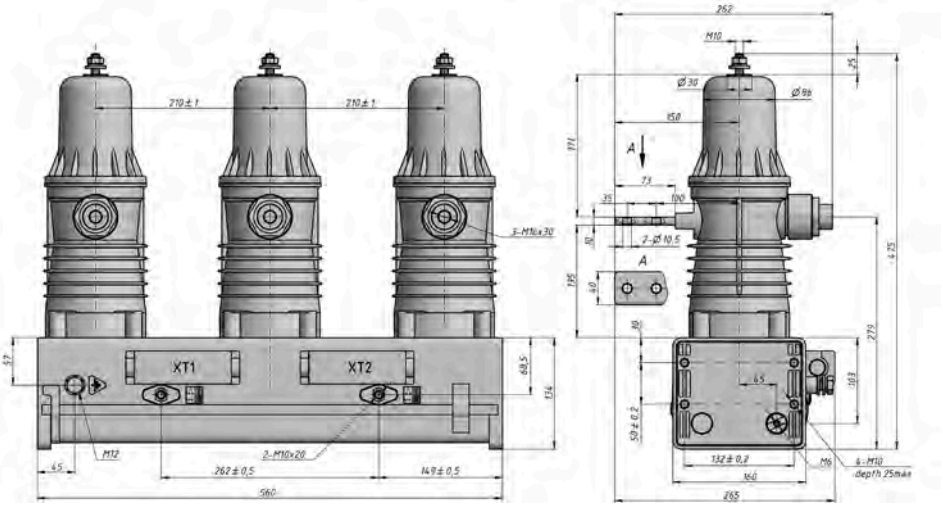

ISM15_LD_1(55),
PCD 210 mm
Weight: 36 kg

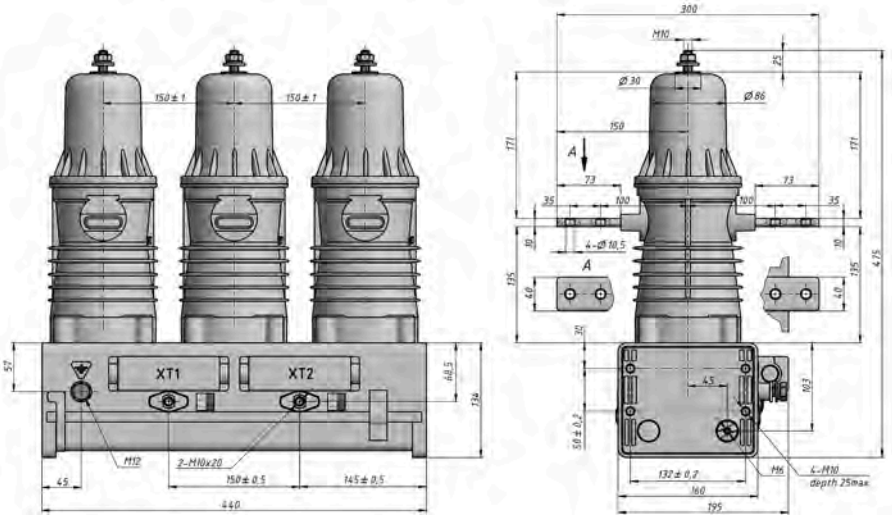

ISM15_LD_1(80), two lower terminals (continuous busbar),
PCD 150 mm
Weight: 36 kg

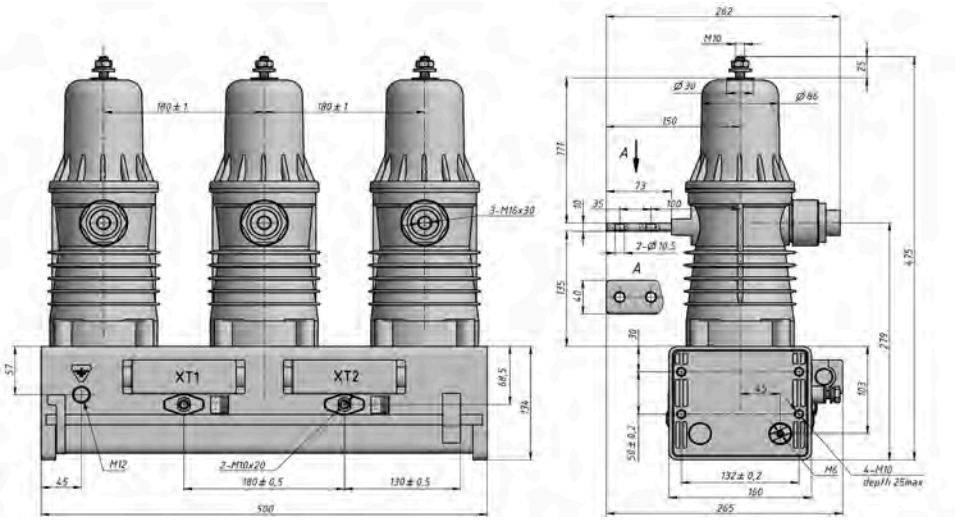

ISM15_LD_1(90),
PCD 180 mm
Weight: 36 kg

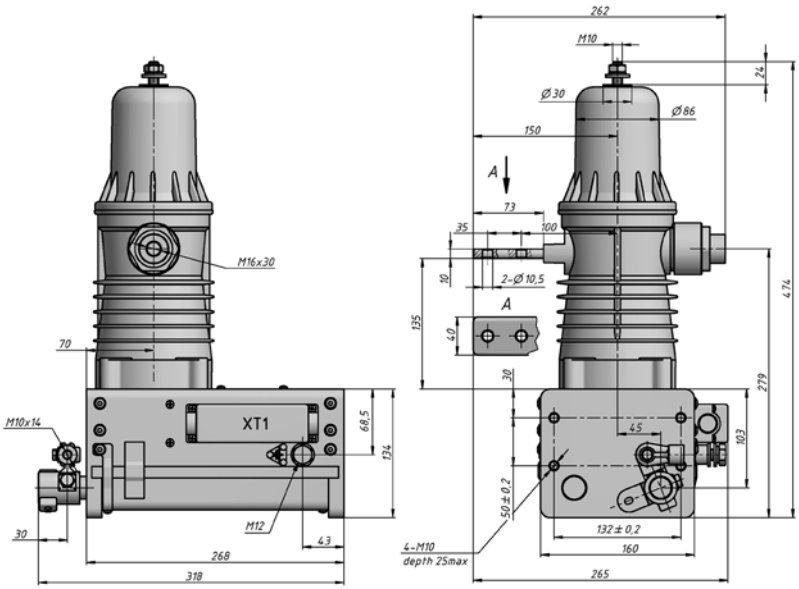

ISM15_LD_3,
Weight: 13 kg

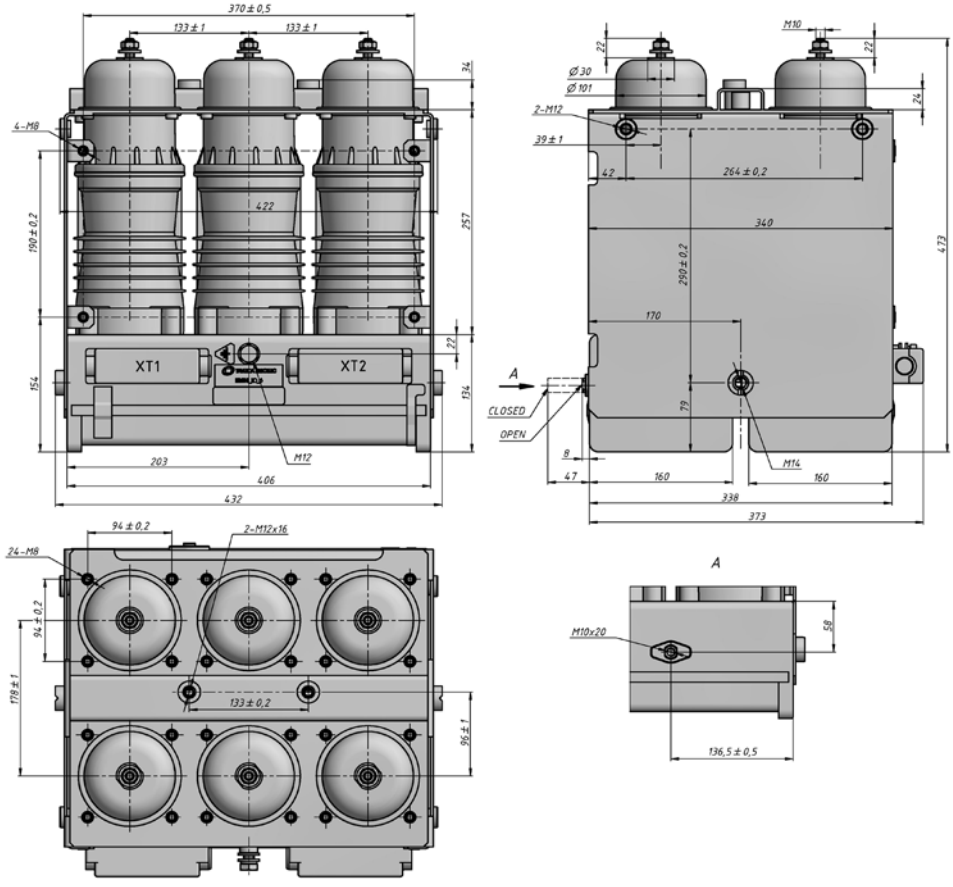

ISM15_LD_6,
PCD 133 mm
Weight: 55 kg

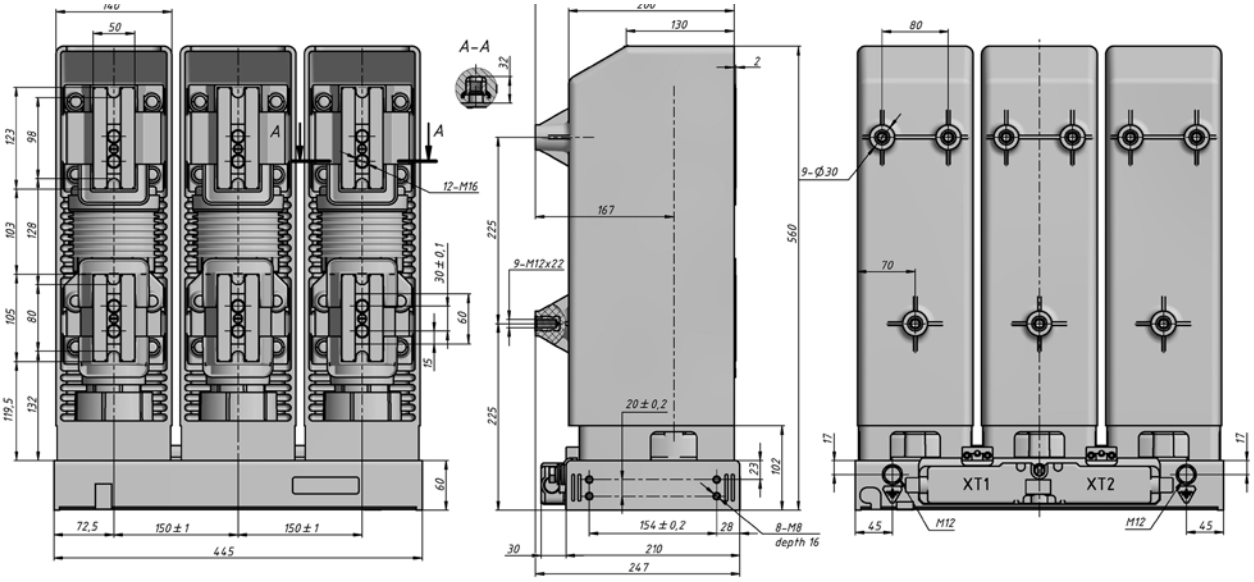

ISM15_Shell_2(150_L),
PCD 150 mm,
Weight: 51 kg

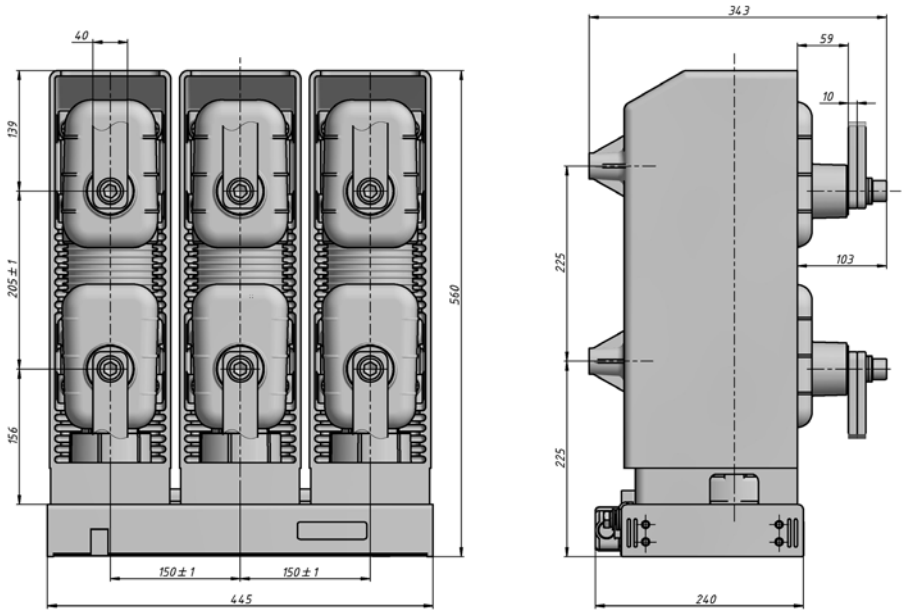

ISM15_Shell_2(150_L) with CBkit_Shell15_1(205) installed*,
PCD 150 mm,
Weight: 59,5 kg

****- busbars shown for reference and are not supplied.***

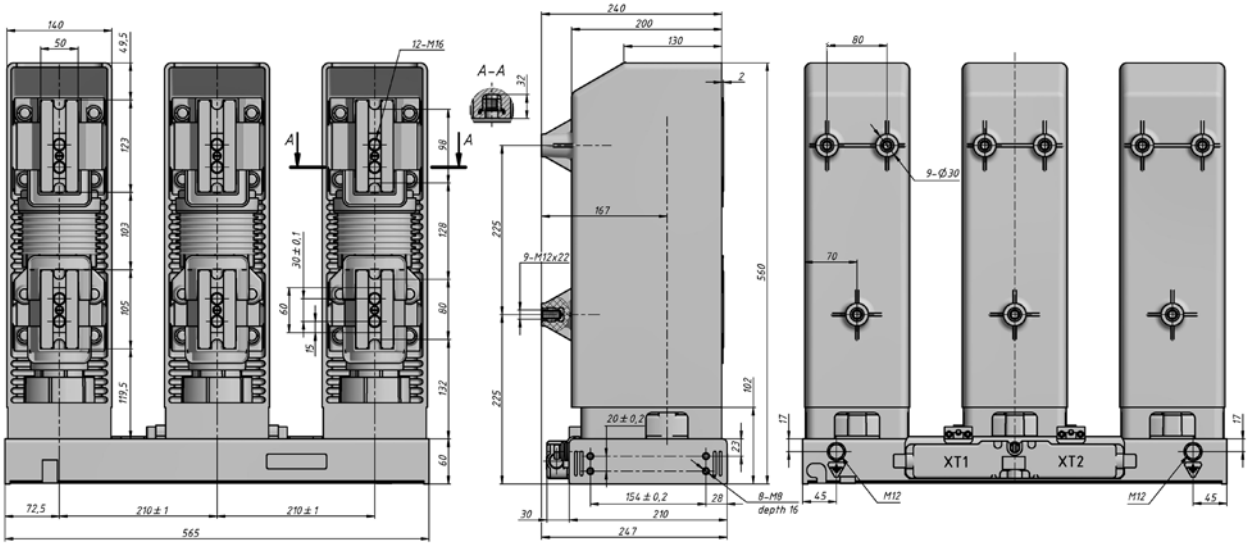

ISM15_Shell_2(210_L),
PCD 210 mm,
Weight: 52 kg

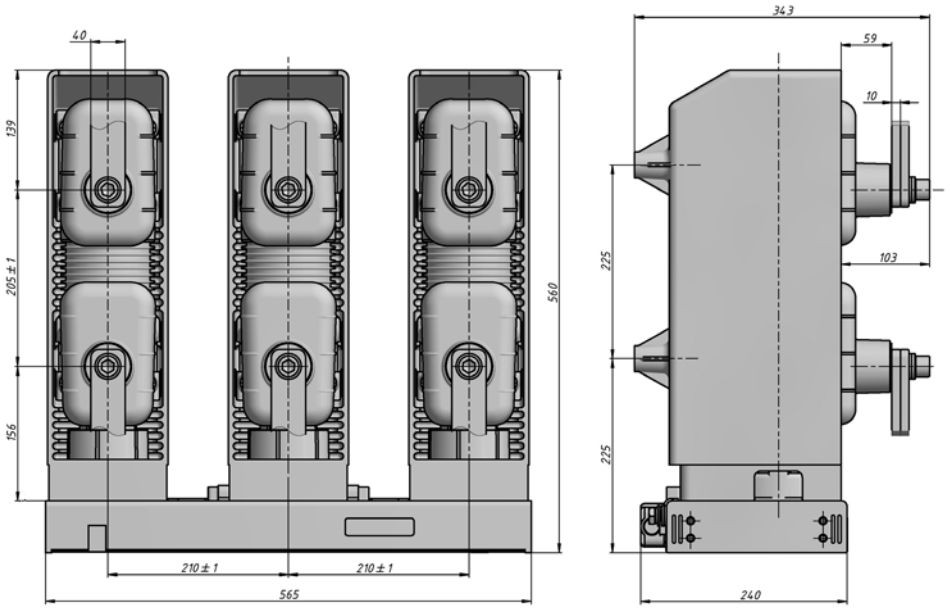

ISM15_Shell_2(210_L) with CBkit_Shell15_1(205) installed*,
PCD 210 mm,
Weight: 60,5 kg

****- busbars shown for reference and are not supplied.***

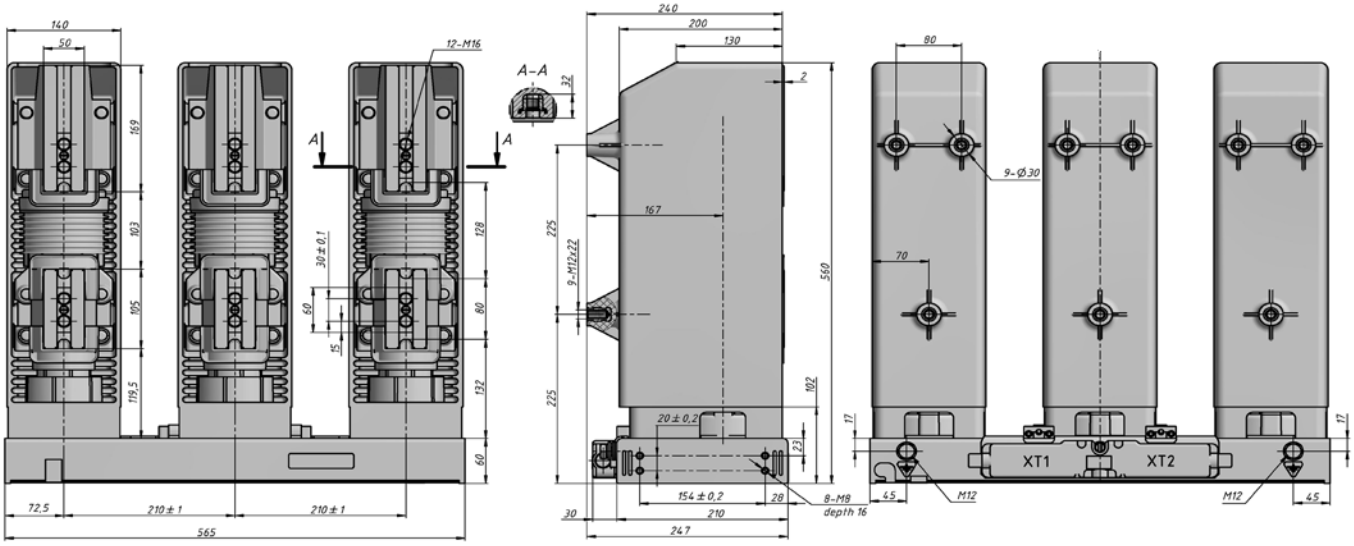

ISM15_Shell_2(210_H),
PCD 210 mm,
Weight: 53 kg

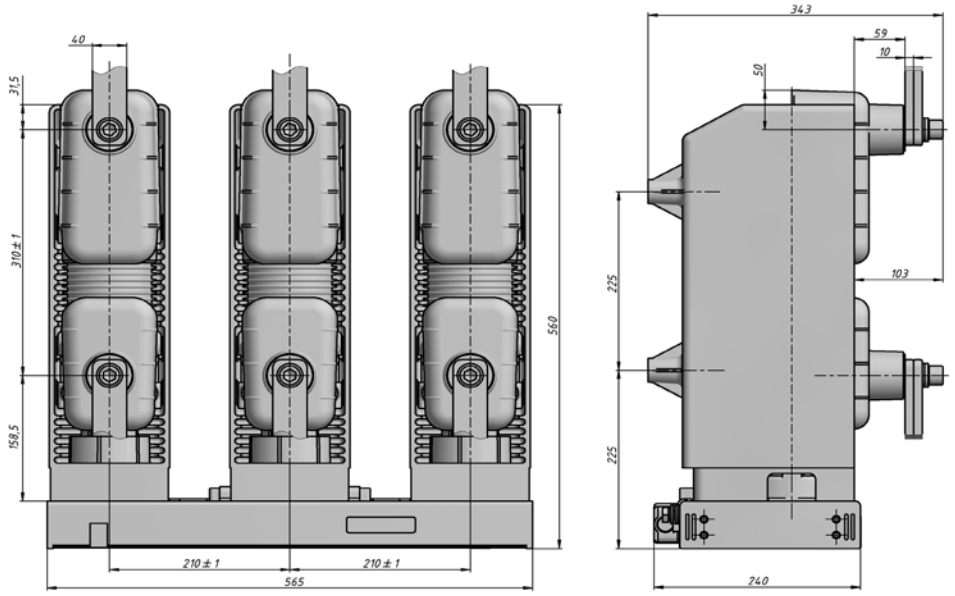

ISM15_Shell_2(210_H) with CBkit_Shell15_1(310) installed*,
PCD 210 mm,
Weight: 61,5 kg

****- busbars shown for reference and are not supplied.***

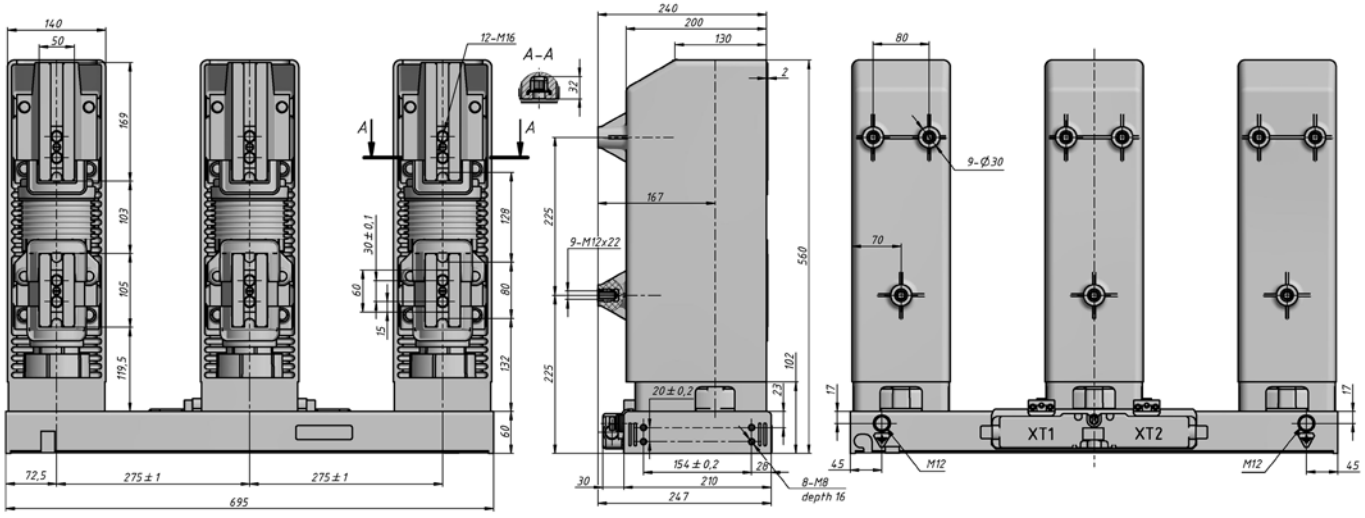

ISM15_Shell_2(275_H),
PCD 275 mm,
Weight: 55 kg

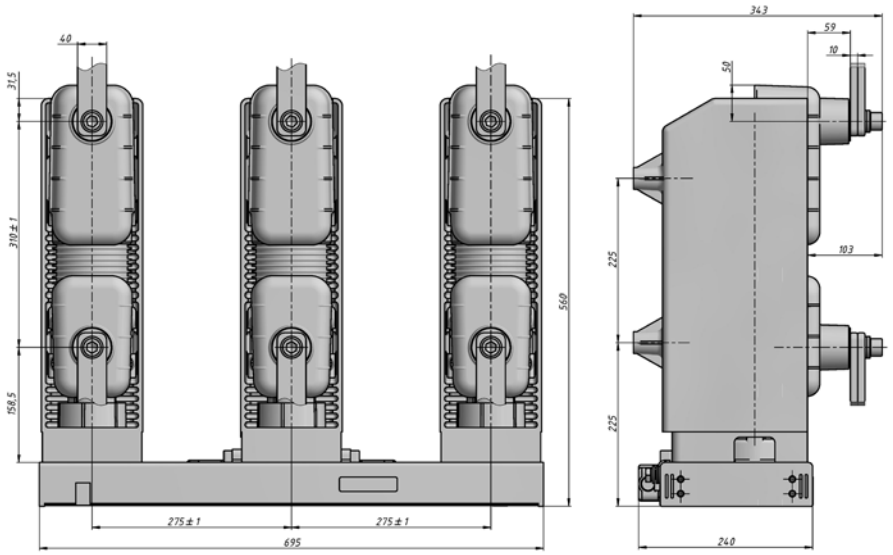

ISM15_Shell_2(275_H) with CBkit_Shell15_1(310) installed*,
PCD 275 mm,
Weight: 63,5 kg

****- busbars shown for reference and are not supplied.***

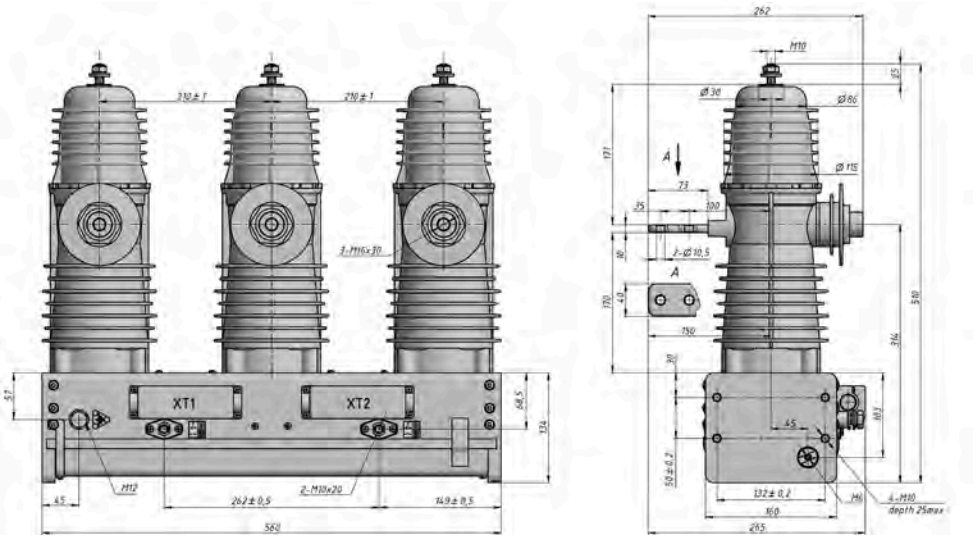

ISM25_LD_1(210_Par2),
PCD 210 mm
Weight: 36 kg

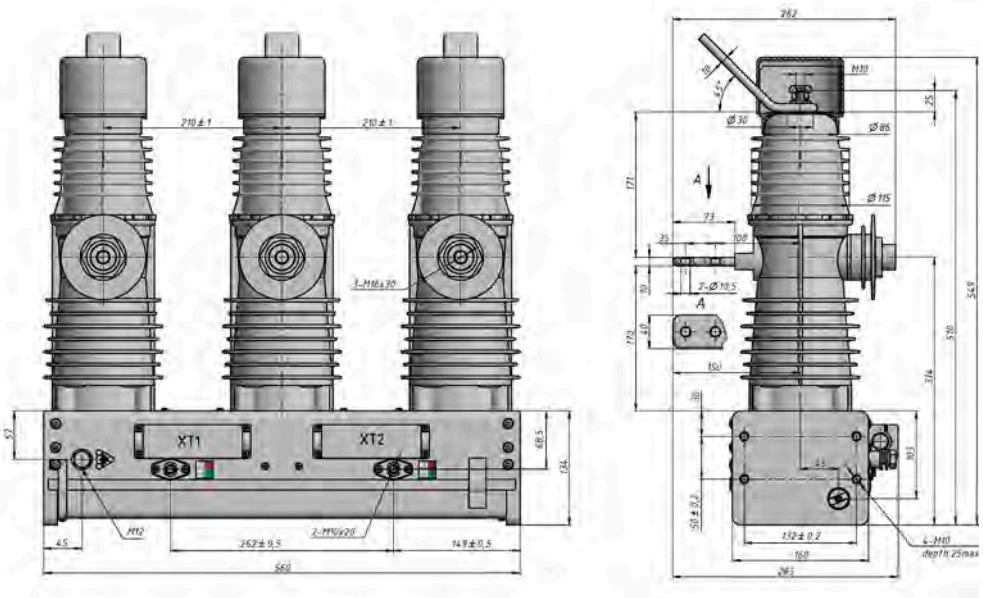

ISM25_LD_1(210_Par2) with CBkit_Ins_3 installed*,
PCD 210 mm,
Weight: 36,6 kg

****- upper busbars shown for reference and are not supplied.***

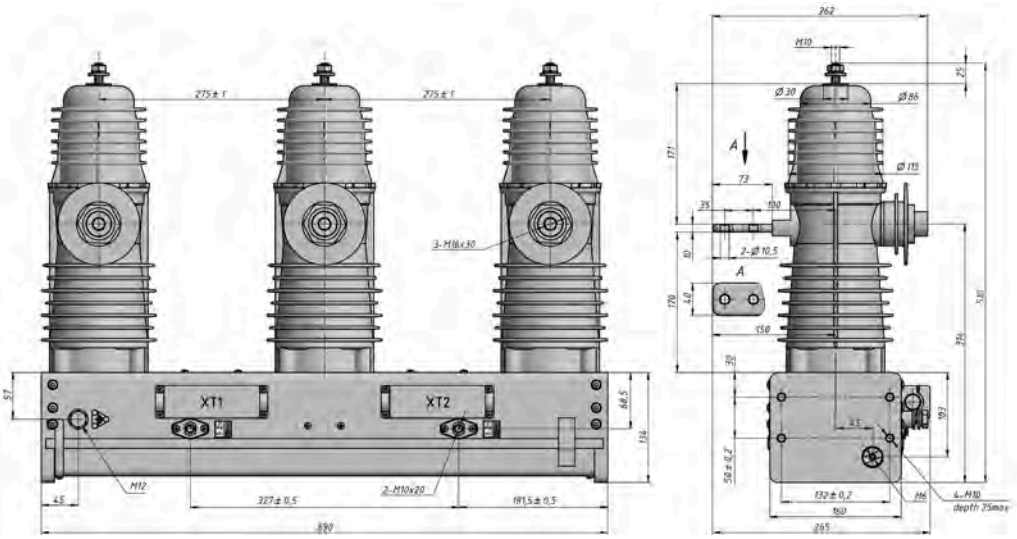

ISM25_LD_1(275_S),
PCD 275 mm
Weight: 38 kg

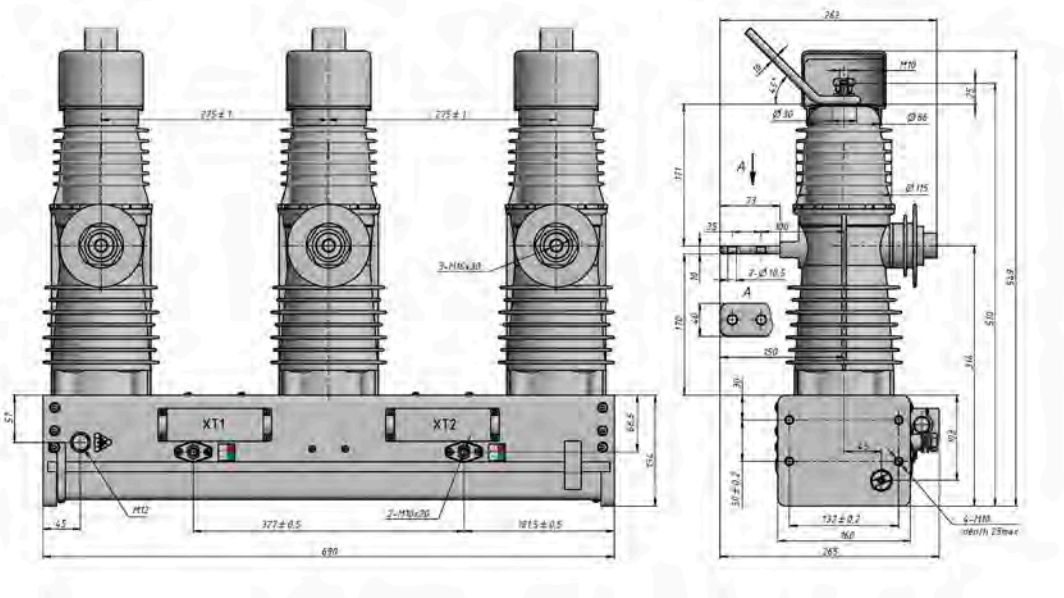

ISM25_LD_1(275_S) with CBkit_Ins_3 installed*,
PCD 275 mm,
Weight: 38,6 kg

****- upper busbars shown for reference and are not supplied.***

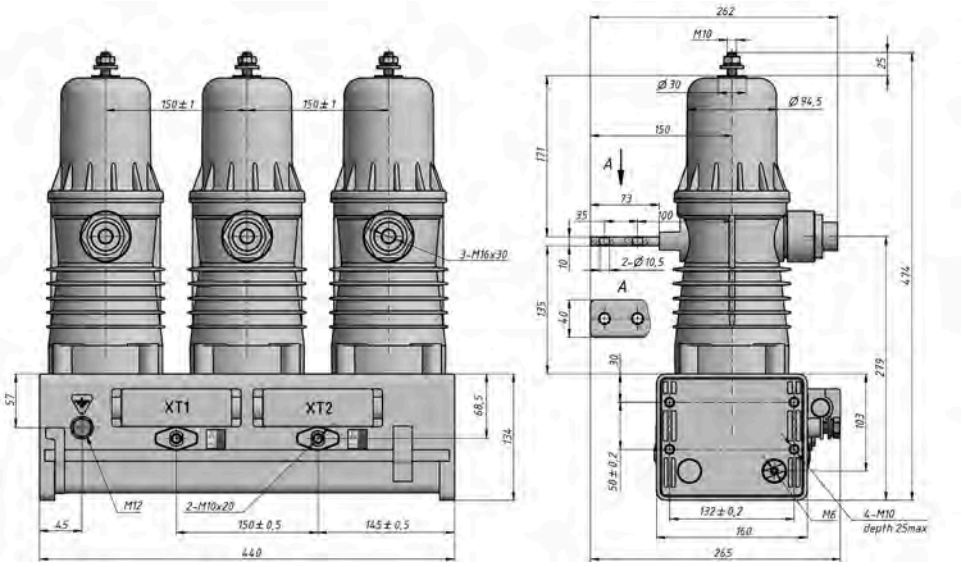

ISM25_LD_2(1),
PCD 150 mm
Weight: 35 kg

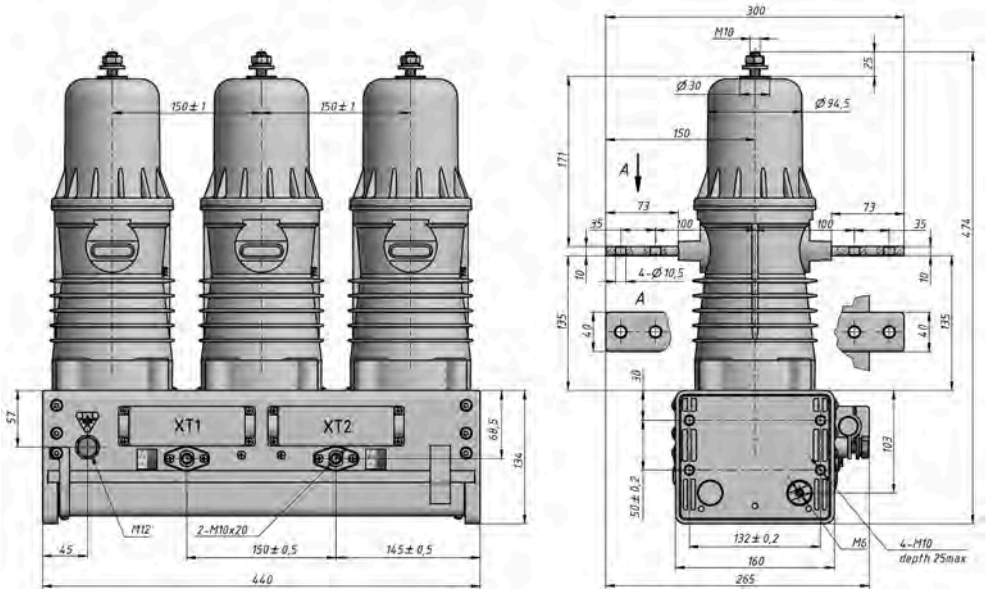

ISM25_LD_2(2),
PCD 150 mm
Weight: 37 kg

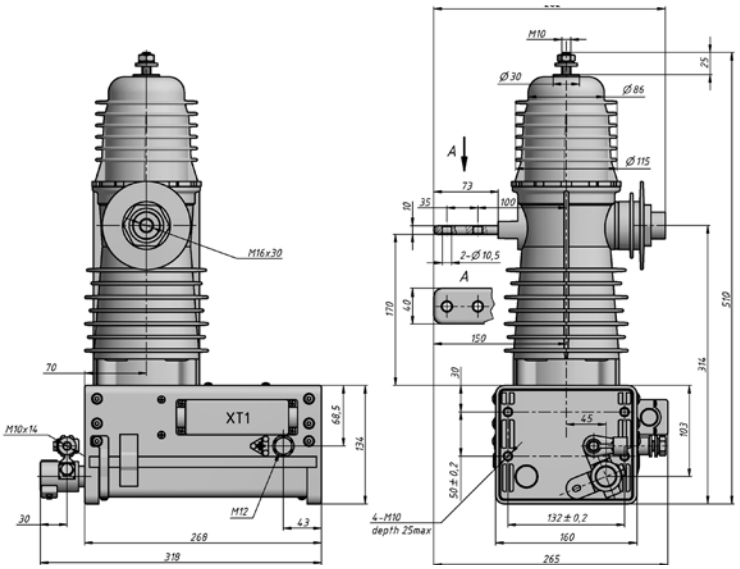

ISM25_LD_3,
Weight: 14 kg

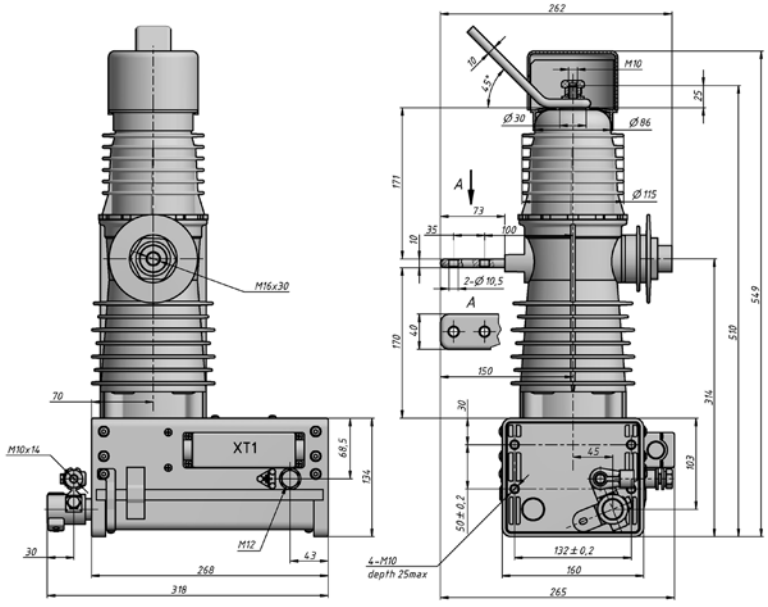

ISM25_LD_3 with CBkit_Ins_3 installed*,
Weight: 14,2 kg

****- upper busbar shown for reference and is not supplied.***

Dimensions of Control Module

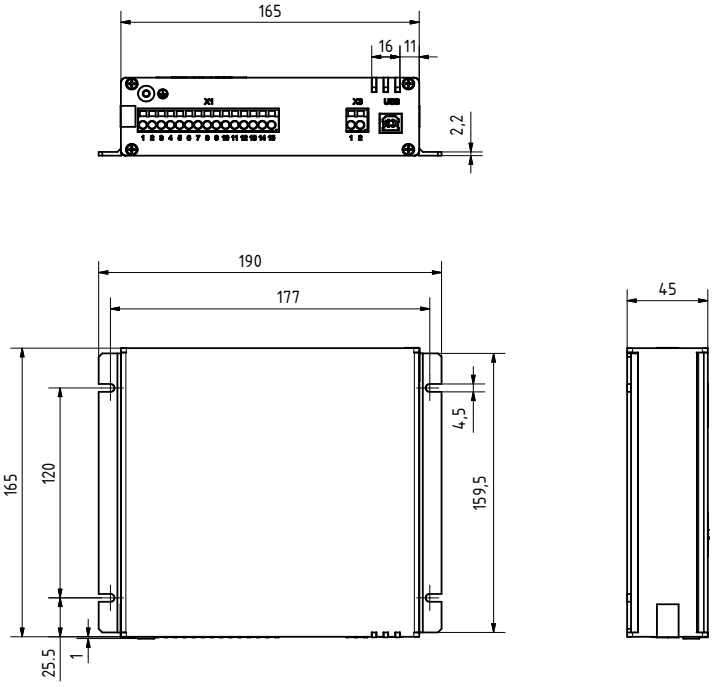

CM_16_1(Par1_CB_Par3)
Weight: 1 kg

Dimensions of accessories

Dimensions of Position Indicator

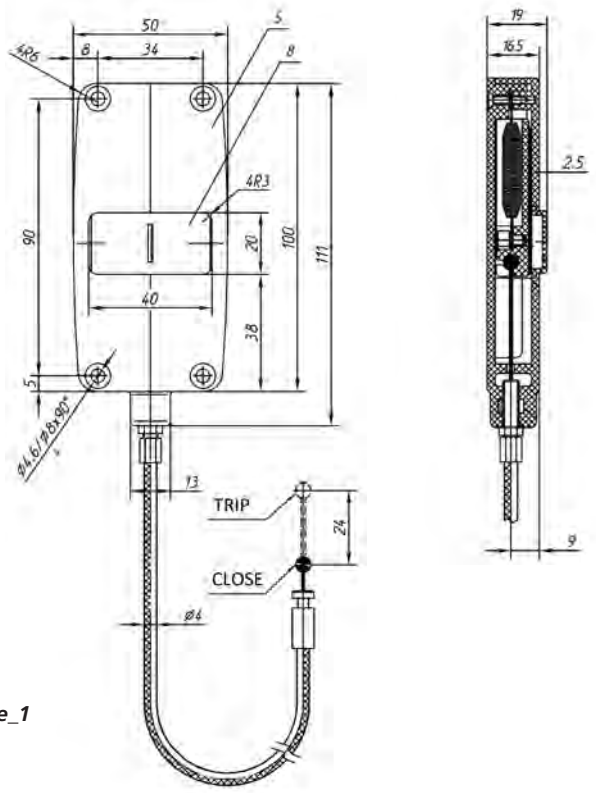

Rope length L=1m

Unit_PosInd_3 with connected CBcomp_RelCable_1

Dimensions of Manual Generator

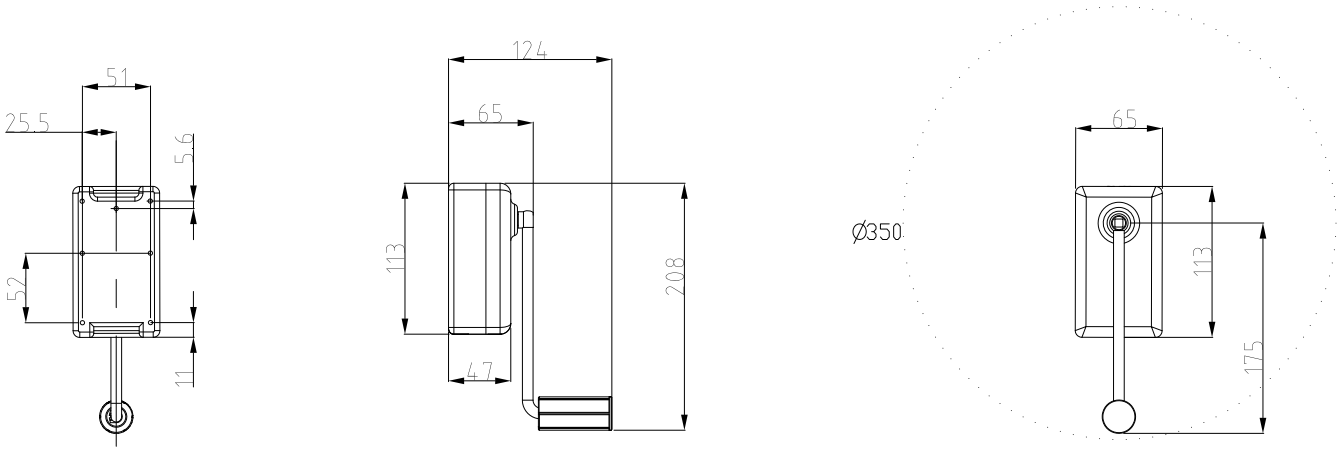

CBunit_ManGen_1, CBunit_ ManGen_2

Appendix 4.
Secondary schemes

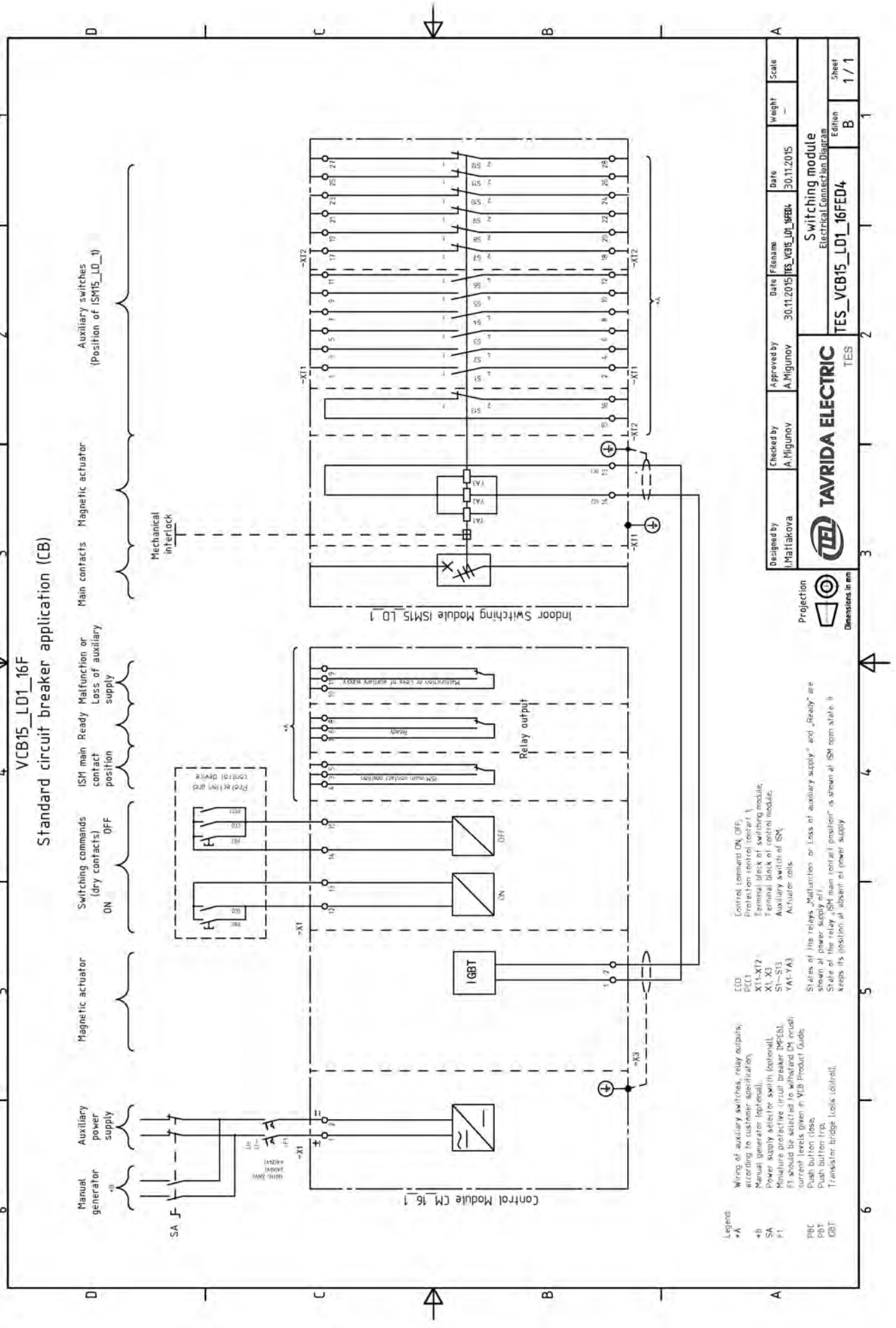
VCB15_LD1_16F
Standard circuit breaker application (CB)
Manual generator
Auxiliary power supply
Magnetic actuator
Switching commands (dry contacts) ON
OFF
ISM main contact position
Ready
Malfunction or Loss of auxiliary supply
Magnetic actuator
Main contacts
Mechanical interlock
Auxiliary switches (Position of ISM15_LD_1)
Control Module CM_16_1
Indoor Switching Module ISM15_LD_1
IGBT
Relay output
Designed by I.Matiakova
Checked by A.Migunov
Approved by A.Migunov
Date 30.11.2015
Filename TES_VCB15_LD1_16FED4
Date 30.11.2015
Switching module
Electrical Connection Diagram
TES_VCB15_LD1_16FED4
Edition B
Weight –
Scale
Sheet 1 / 1
TAVRIDA ELECTRIC
TES
Projection
Dimensions in mm

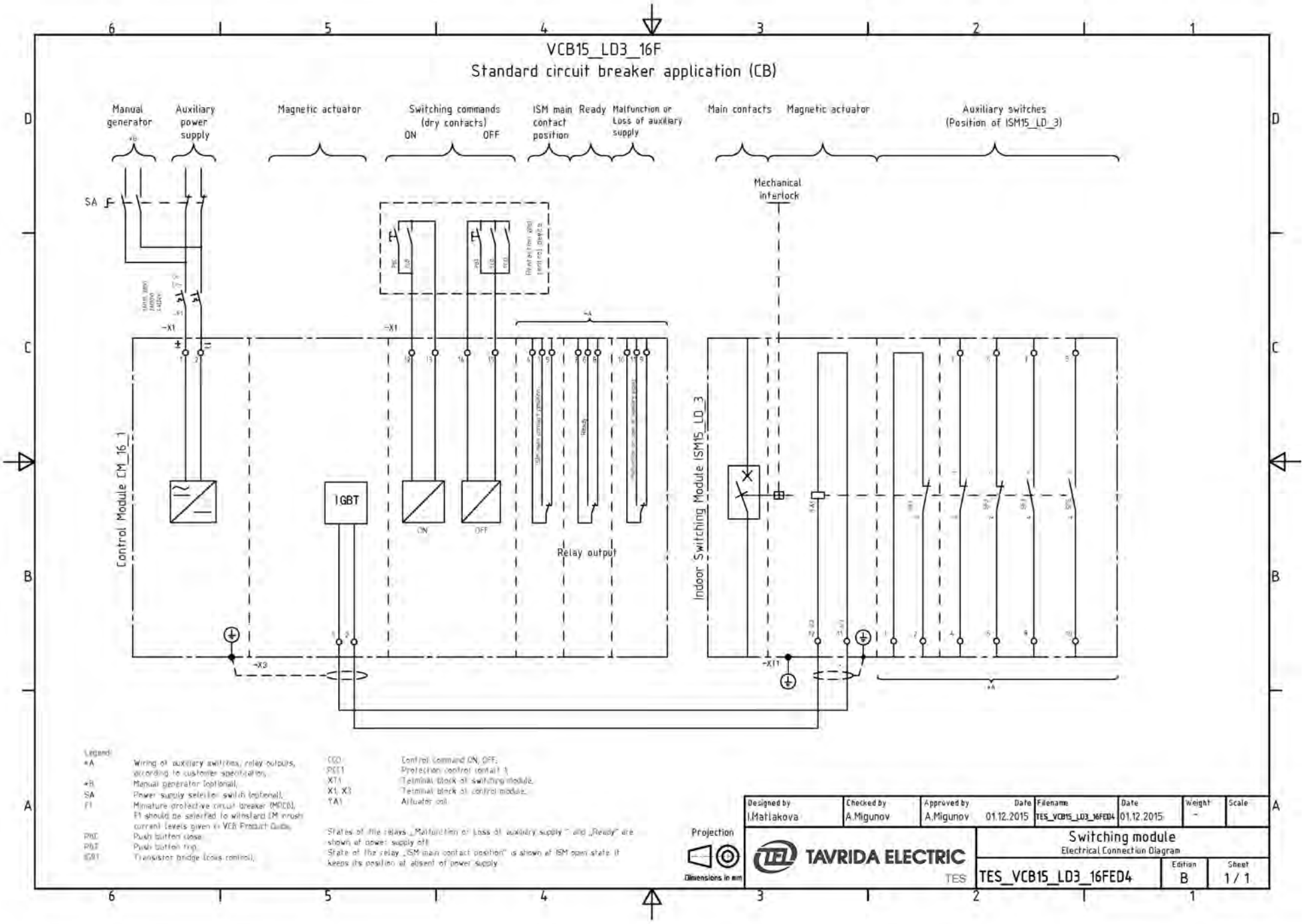
VCB15_LD3_16F
Standard circuit breaker application (CB)
Manual generator
Auxiliary power supply
Magnetic actuator
Switching commands (dry contacts)
ON
OFF
ISM main contact position
Ready
Malfunction or Loss of auxiliary supply
Main contacts
Magnetic actuator
Auxiliary switches (Position of ISM15_LD_3)
Mechanical interlock
SA
Control Module CM_16_1
IGBT
Relay output
Indoor Switching Module ISM15_LD_3
Legend:
*A Wiring of auxiliary switches, relay outputs, according to customer specification.
*B Manual generator (optional).
SA Power supply selector switch (optional).
F1 Miniature protective circuit breaker (MPCB). F1 should be selected to withstand EM inrush current levels given in VCB Product Guide.
PNC Push button close.
PNT Push button trip.
IGBT Transistor bridge (coils control).
CCO Control command ON, OFF.
PCT1 Protection control contact 1.
XT1 Terminal block of switching module.
X1, X3 Terminal block of control module.
YA1 Actuator coil.
"States of the relays „Malfunction or Loss of auxiliary supply" and „Ready" are shown at power supply off.
State of the relay „ISM main contact position" is shown at ISM open state. It keeps its position at absent of power supply.
Projection
Dimensions in mm
Designed by I.Matlakova
Checked by A.Migunov
Approved by A.Migunov
Date 01.12.2015
Filename TES_VCB15_LD3_16FED4
Date 01.12.2015
Weight -
Scale
TAVRIDA ELECTRIC
TES
Switching module
Electrical Connection Diagram
TES_VCB15_LD3_16FED4
Edition B
Sheet 1 / 1

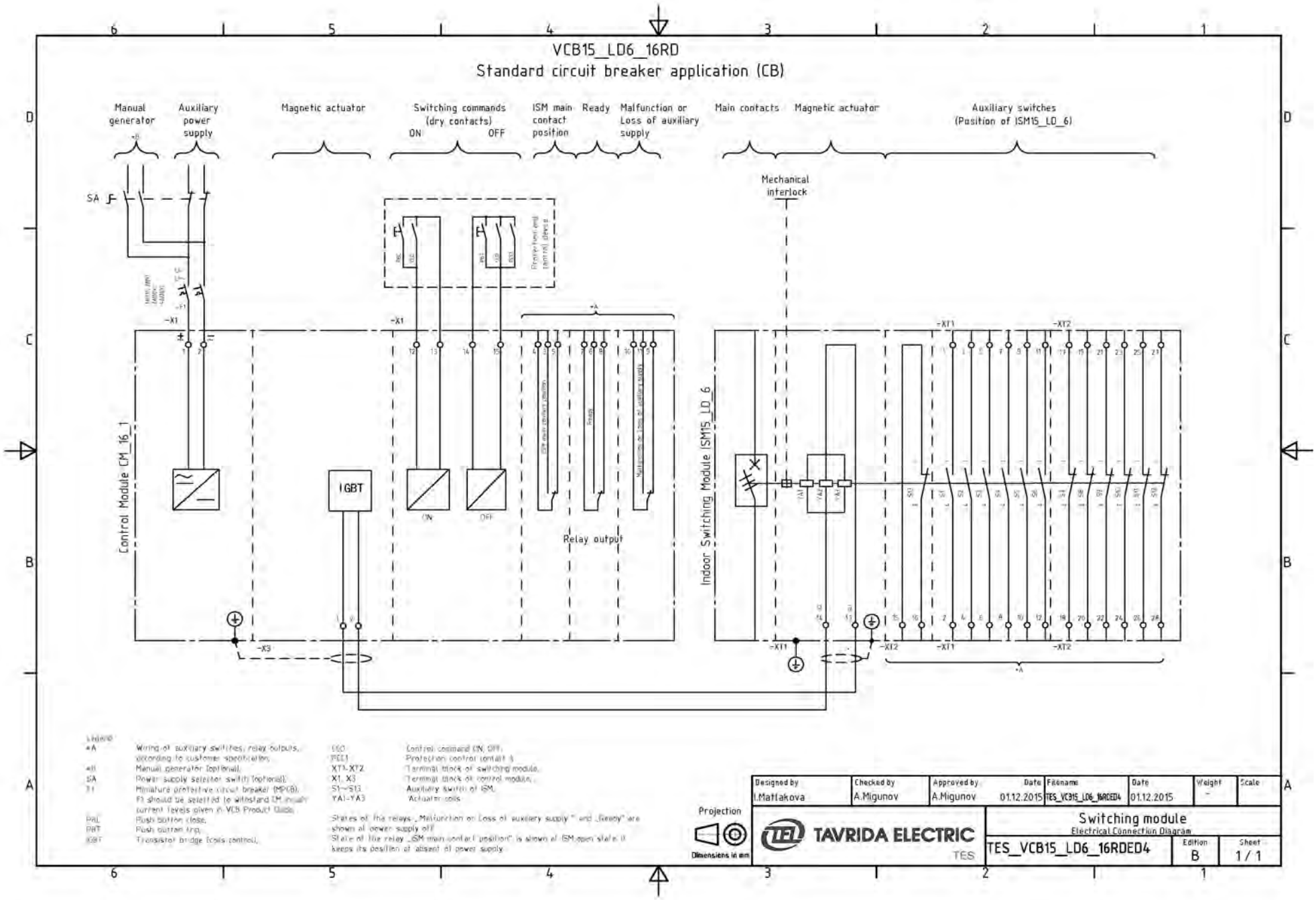
VCB15_LD6_16RD
Standard circuit breaker application (CB)
Manual generator
Auxiliary power supply
Magnetic actuator
Switching commands (dry contacts)
ON
OFF
ISM main contact position
Ready
Malfunction or Loss of auxiliary supply
Main contacts
Magnetic actuator
Auxiliary switches (Position of ISM15_LD_6)
Mechanical interlock
SA
Control Module CM_16_1
IGBT
Relay output
Indoor Switching Module ISM15_LD_6
Legend
Wiring of auxiliary switches, relay outputs, according to customer specification
Manual generator (optional)
Power supply selector switch (optional)
Miniature protective circuit breaker (MPCB). F1 should be selected to withstand CM inrush current levels given in VCB Product Guide
Push button close
Push button trip
Transistor bridge (coils control)
Control command (ON, OFF)
Protection control contact
Terminal block of switching module
Terminal block of control module
Auxiliary switch of ISM
Actuator coils
States of the relays „Malfunction or Loss of auxiliary supply" and „Ready" are shown at power supply off
State of the relay „ISM main contact position" is shown at ISM open state (keeps its position at absent of power supply
Projection
Dimensions in mm
Designed by I.Matlakova
Checked by A.Migunov
Approved by A.Migunov
Date 01.12.2015
Filename TES_VCB15_LD6_16RDED4
Date 01.12.2015
Weight -
Scale
TAVRIDA ELECTRIC
TES
Switching module
Electrical Connection Diagram
TES_VCB15_LD6_16RDED4
Edition B
Sheet 1 / 1

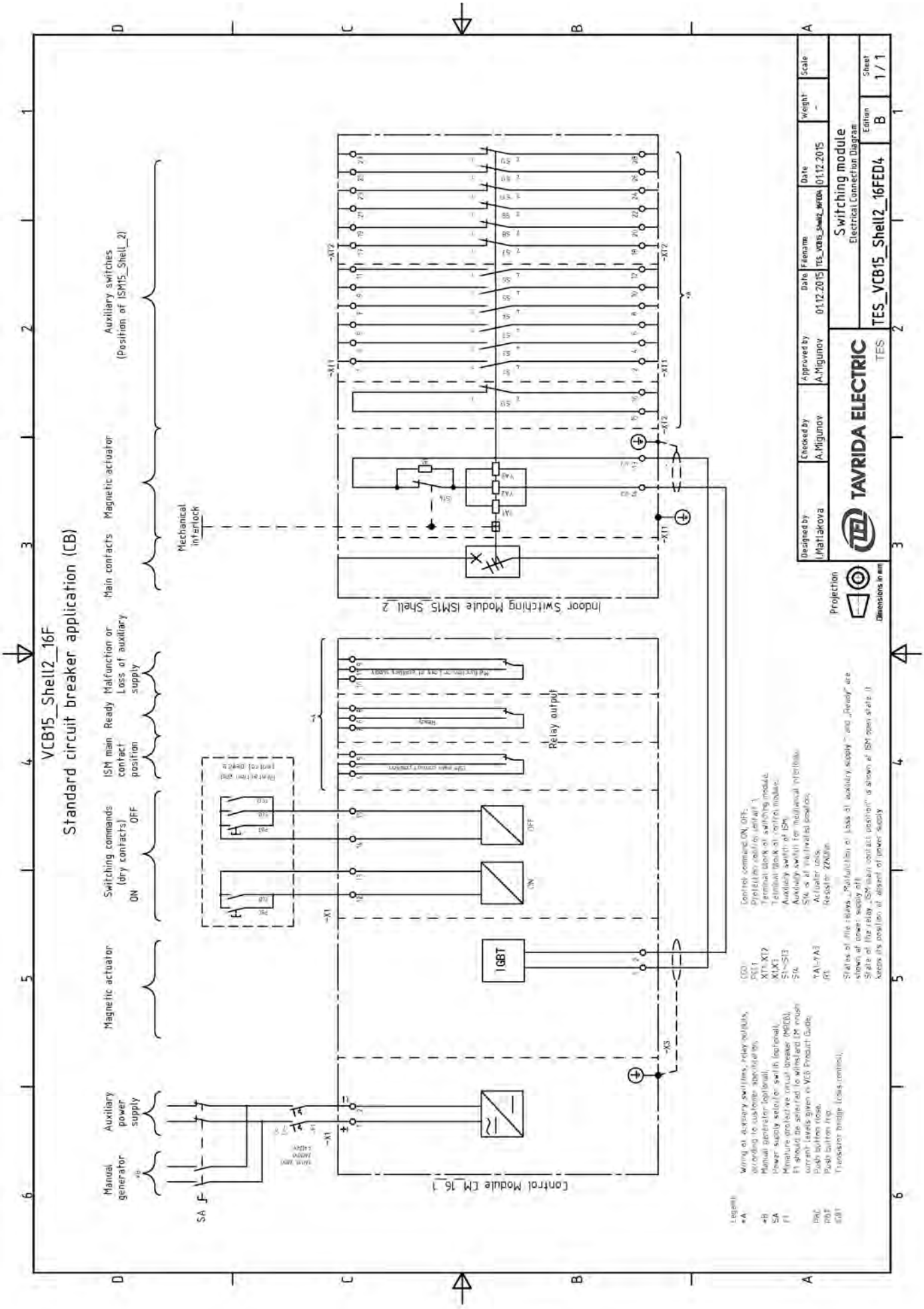
VCB15_Shell2_16F
Standard circuit breaker application (CB)
Manual generator
Auxiliary power supply
Magnetic actuator
Switching commands (dry contacts)
ON
OFF
ISM main contact position
Ready
Malfunction or Loss of auxiliary supply
Main contacts
Magnetic actuator
Auxiliary switches (Position of ISM15_Shell_2)
Mechanical interlock
Control Module CM_16_1
Indoor Switching Module ISM15_Shell_2
Relay output
IGBT
Designed by
I.Matlakova
Checked by
A.Migunov
Approved by
A.Migunov
Date
01.12.2015
Filename
TES_VCB15_Shell2_16FED4
Date
01.12.2015
Weight
-
Scale
Switching module
Electrical Connection Diagram
TES_VCB15_Shell2_16FED4
Edition
B
Sheet
1 / 1
TAVRIDA ELECTRIC
TES
Projection
Dimensions in mm

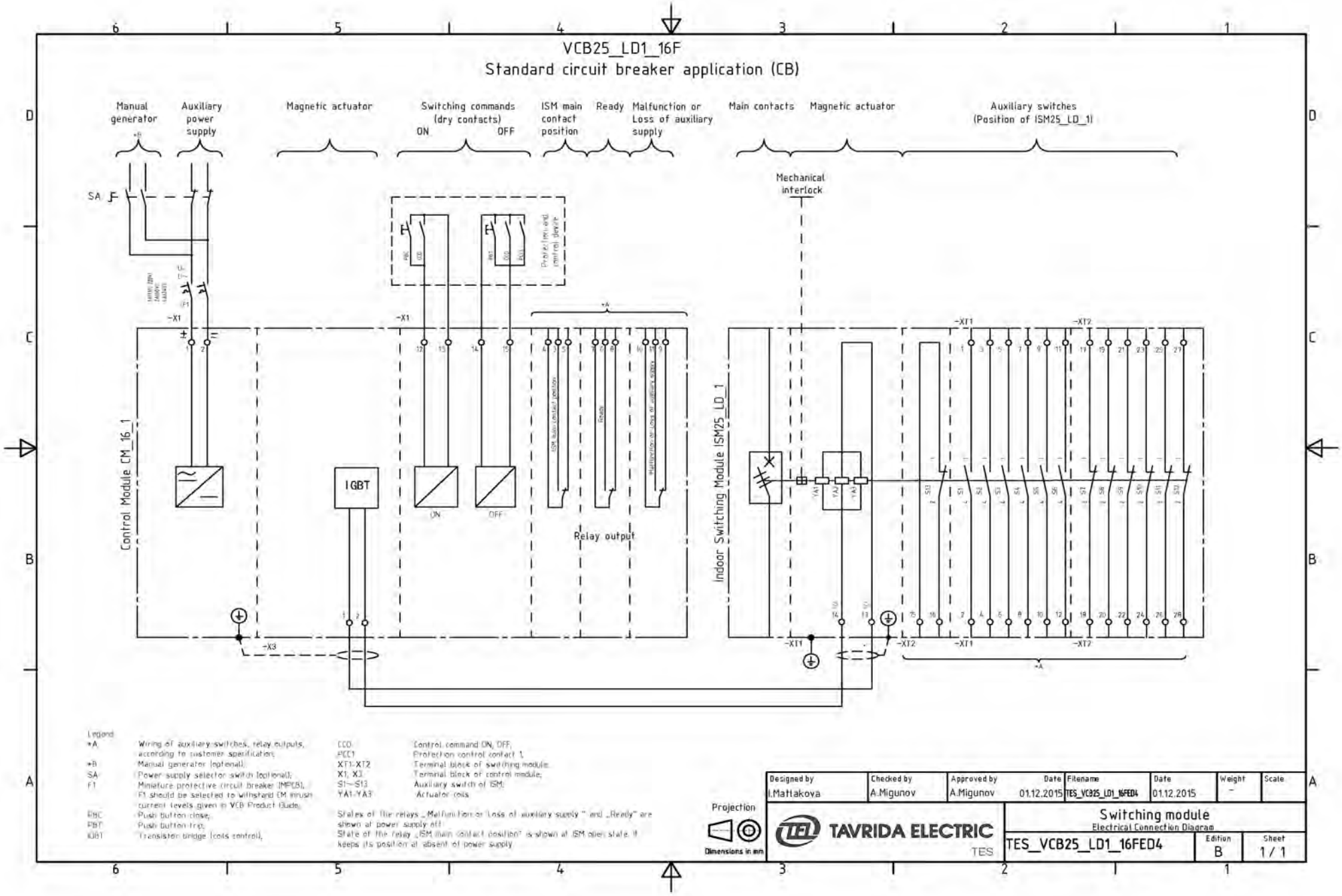
VCB25_LD1_16F
Standard circuit breaker application (CB)
Manual generator
Auxiliary power supply
Magnetic actuator
Switching commands (dry contacts)
ON
OFF
ISM main contact position
Ready
Malfunction or Loss of auxiliary supply
Main contacts
Magnetic actuator
Auxiliary switches (Position of ISM25_LD_1)
Mechanical interlock
SA
F1
-X1
Control Module CM_16_1
IGBT
-X3
ON
OFF
Relay output
Indoor Switching Module ISM25_LD_1
-XT1
-XT2
YA1
YA2
YA3
Legend
*A Wiring of auxiliary switches, relay outputs, according to customer specification;
*B Manual generator (optional);
SA Power supply selector switch (optional);
F1 Miniature protective circuit breaker (MPCB), F1 should be selected to withstand CM inrush current levels given in VCB Product Guide;
PBC Push button close;
PBT Push button trip;
IGBT Transistor bridge (coils control);
CCO Control command ON, OFF;
APCC1 Protection control contact 1;
XT1-XT2 Terminal block of switching module;
X1, X3 Terminal block of control module;
S1—S13 Auxiliary switch of ISM;
YA1-YA3 Actuator coils
States of the relays „Malfunction or Loss of auxiliary supply " and „Ready" are shown at power supply off.
State of the relay „ISM main contact position" is shown at ISM open state. It keeps its position at absent of power supply.
Projection
Dimensions in mm
Designed by I.Maltakova
Checked by A.Migunov
Approved by A.Migunov
Date 01.12.2015
Filename TES_VCB25_LD1_16FED4
Date 01.12.2015
Weight -
Scale
TAVRIDA ELECTRIC
TES
Switching module
Electrical Connection Diagram
TES_VCB25_LD1_16FED4
Edition B
Sheet 1 / 1

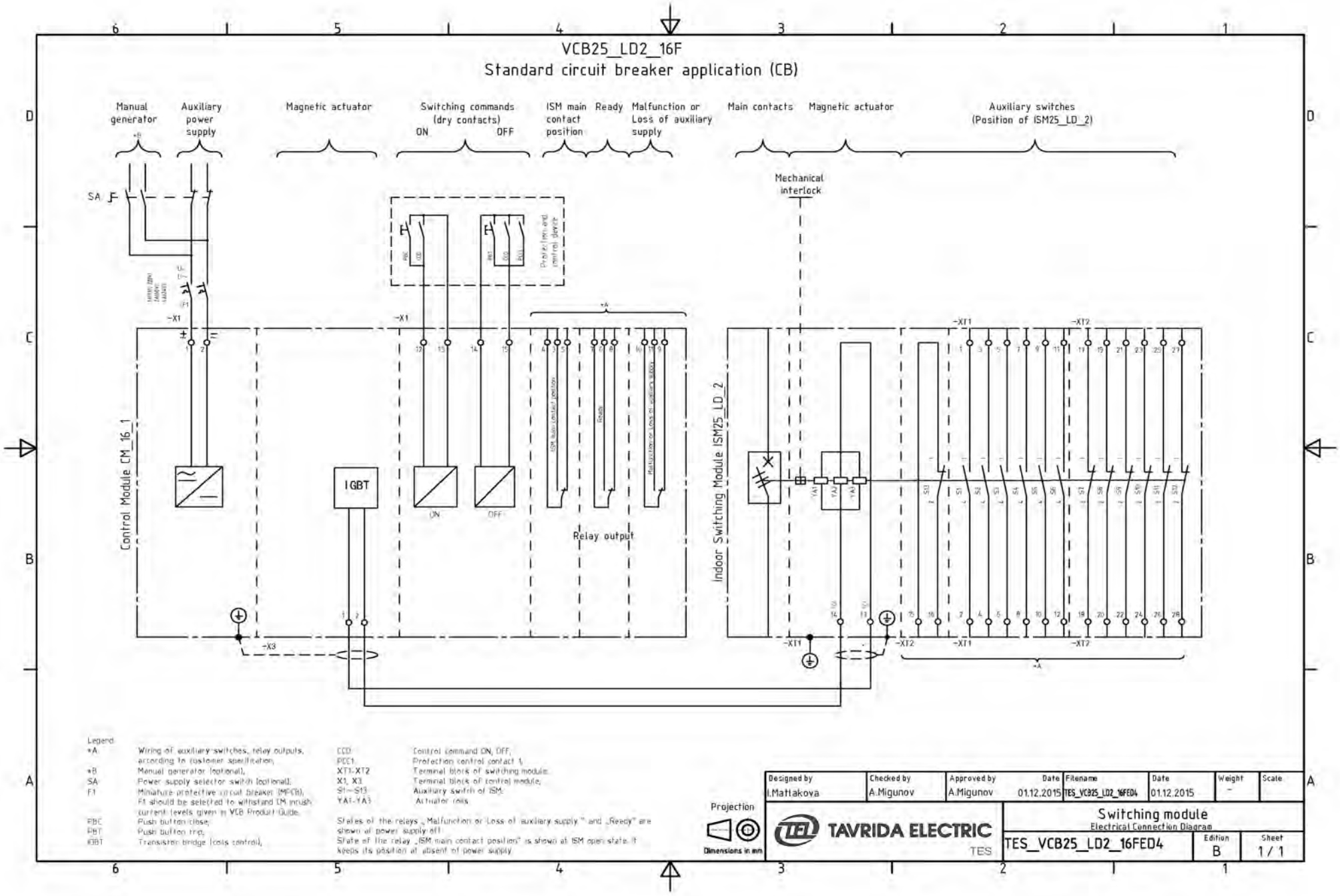
VCB25_LD2_16F
Standard circuit breaker application (CB)
Manual generator
Auxiliary power supply
Magnetic actuator
Switching commands (dry contacts)
ON
OFF
ISM main contact position
Ready
Malfunction or Loss of auxiliary supply
Main contacts
Magnetic actuator
Auxiliary switches (Position of ISM25_LD_2)
Mechanical interlock
SA
Control Module CM_16_1
Indoor Switching Module ISM25_LD_2
IGBT
Relay output
Legend
*A Wiring of auxiliary switches, relay outputs, according to customer specification;
*B Manual generator (optional);
SA Power supply selector switch (optional);
F1 Miniature protective circuit breaker (MPCB). F1 should be selected to withstand CM inrush current levels given in VCB Product Guide.
PBC Push button close;
PBT Push button trip;
IGBT Transistor bridge (coils control);
CCO Control command ON, OFF;
PCC1 Protection control contact 1;
XT1-XT2 Terminal block of switching module;
X1, X3 Terminal block of control module;
S1—S13 Auxiliary switch of ISM;
YA1-YA3 Actuator coils
States of the relays „Malfunction or Loss of auxiliary supply" and „Ready" are shown at power supply off.
State of the relay „ISM main contact position" is shown at ISM open state. It keeps its position at absent of power supply.
Projection
Dimensions in mm
Designed by I.Matlakova
Checked by A.Migunov
Approved by A.Migunov
Date 01.12.2015
Filename TES_VCB25_LD2_16FED4
Date 01.12.2015
Weight -
Scale
TAVRIDA ELECTRIC
TES
Switching module
Electrical Connection Diagram
TES_VCB25_LD2_16FED4
Edition B
Sheet 1 / 1

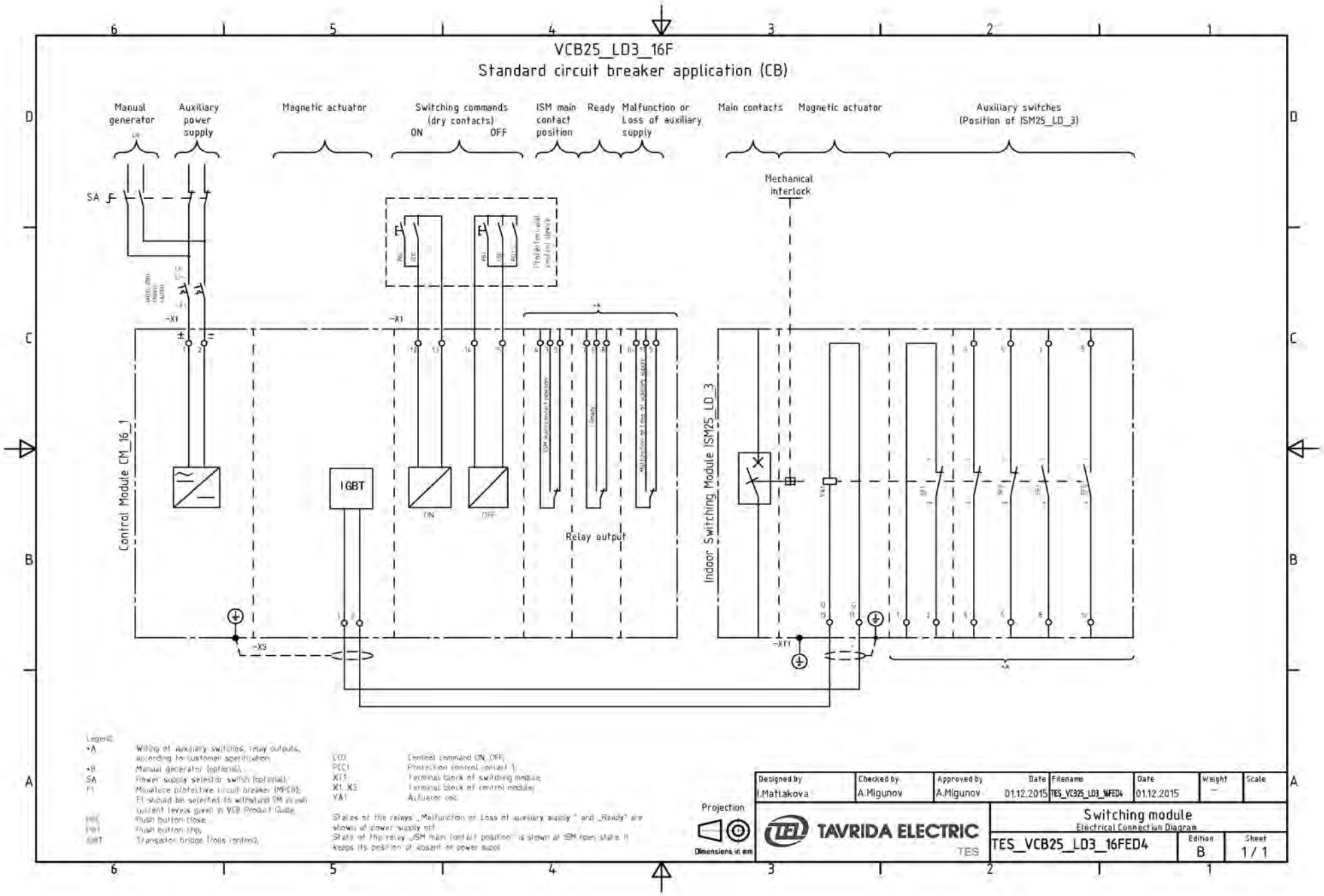
VCB25_LD3_16F
Standard circuit breaker application (CB)
Manual generator
Auxiliary power supply
Magnetic actuator
Switching commands (dry contacts)
ON
OFF
ISM main contact position
Ready
Malfunction or Loss of auxiliary supply
Main contacts
Magnetic actuator
Auxiliary switches (Position of ISM25_LD_3)
Mechanical interlock
SA
Control Module CM_16_1
IGBT
Relay output
Indoor Switching Module ISM25_LD_3
Legend:
Wiring of auxiliary switches, relay outputs, according to customer specification
Manual generator (optional)
Power supply selector switch (optional)
Miniature protective circuit breaker (MPCB); F1 should be selected to withstand SM inrush current levels given in VCB Product Guide
Push button close
Push button trip
Transistor bridge (coils control)
Control command ON, OFF
Protection control (relay 1)
Terminal block of switching module
Terminal block of control module
Actuator coil
States of the relays „Malfunction or Loss of auxiliary supply" and „Ready" are shown at power supply off.
State of the relay „ISM main contact position" is shown at ISM open state. It keeps its position at absent of power supply
Projection
Dimensions in mm
Designed by I.Maltakova
Checked by A.Migunov
Approved by A.Migunov
Date 01.12.2015
Filename TES_VCB25_LD3_16FED4
Date 01.12.2015
Weight —
Scale
TAVRIDA ELECTRIC
TES
Switching module
Electrical Connection Diagram
TES_VCB25_LD3_16FED4
Edition B
Sheet 1 / 1

TAVRIDA ELECTRIC

Brasil

Tavrida Electric do Brasil
Av. Ireno da Silva Venâncio, 199
GP04A - Protestantes
Votorantim / SP
Phone: + 55 (15) 3243-2555
Fax: + 55 (15) 3243-4233
E-Mail: info@tavrida.com.br
Web: www.tavrida.com.br

China

Tavrida Electric QingDao Co., Ltd.
No. 336, Songling Road,
Laoshan District, 266104,
QingDao, China
Phone: +86 (532) 5555 2366
Fax: +86 (532) 5555 2377
E-Mail: info@tavrida.cn
Web: www.tavrida.cn

Germany

Tavrida Electric GmbH
Im Leimen 14
88069 Tettnang/Tannau
Germany
Phone: + 49 (0) 7542 9467851
Fax: + 49 (0) 7542 9467861
E-Mail: info@tavrida.de
Web: www.tavrida.de

India

Tavrida Electric India Private Limited
15 NC, Block-A, New Alipore
Kolkata - 700 053
West Bengal, India
Phone: +91 33 2488 1715/3260 8634
Fax: +91 33 2488 1766
E-Mail: info@tavrida.in
Web: www.tavrida.in

Switzerland

Tavrida Electric AG
Rheinweg 4
8200 Schaffhausen
Switzerland
Phone: + 41 (0) 52 630 26 00
Fax: + 41 (0) 52 630 26 09
E-Mail: info@tavrida.ch
Web: www.tavrida.ch

South Africa

Tavrida Electric Africa (Pty) Ltd.
Cnr. Van Dyk and Commissioner Streets
Boksburg East, Gauteng
Republic of South Africa
Phone: +27 11 9142199
Fax: +27 11 9142323
E-Mail: support@tavrida.co.za
Web: www.tavrida.co.za

This document is copyright and is intended for users and distributors of Tavrida Electric product. It contains information that is the intellectual property of Tavrida Electric and the document, or any part thereof, should not be copied or reproduced in any form without written permission from Tavrida Electric.
Tavrida Electric applies a policy of ongoing development and reserves the right to change product without notice. Tavrida Electric does not accept any responsibility for loss or damage incurred as a result of acting or refraining from action based on information in this Product Guide.

Document code: TES_CBdoc_PG_VCB Version: Rev 1.10 Date: 01/12/2015